ASSEMBLY INSTRUCTION

ITEM: N725P497037

STORAGE CABINET

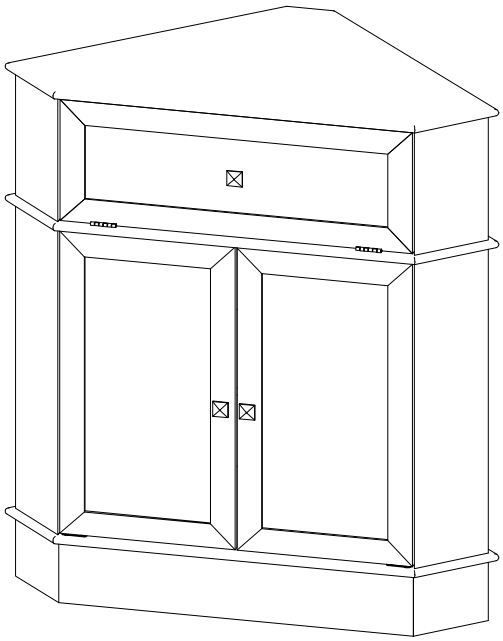

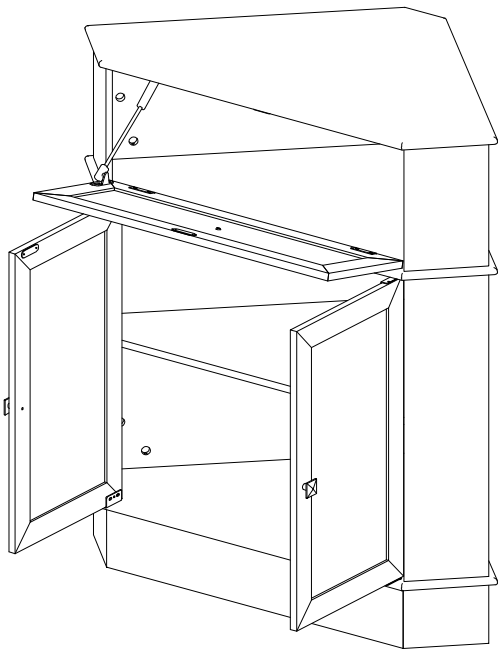

⚠ WARNING !	⚠ AVERTISSEMENT !
 This product is NOT a Clothing Storage Unit (CSU) DO NOT use it for clothing storage. Improper use may cause furniture tipover.	 Ce produit N'EST PAS une unité de rangement pour vêtements (CSU). NE l'utilisez PAS pour le rangement de vêtements. Une utilisation impropre peut entraîner un basculement des meubles.

ASSEMBLY INSTRUCTION

ITEM : N725P497037

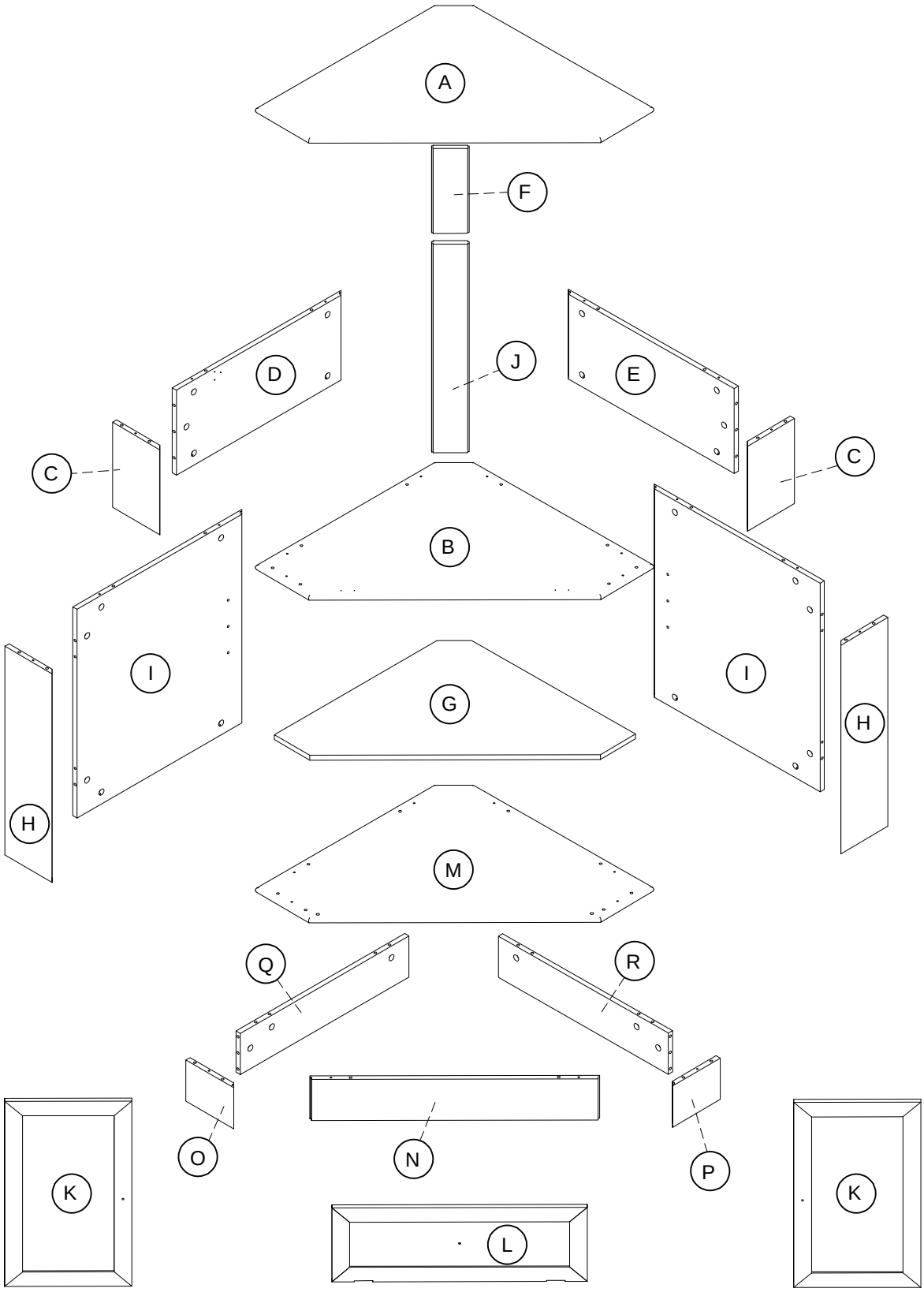

PART LIST

A x 1 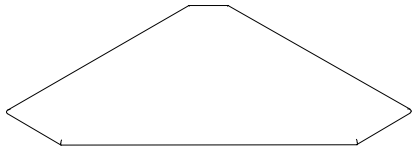 Top Panel	H x 2 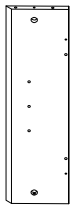 Lower Front Side Vertical Rail
B x 1 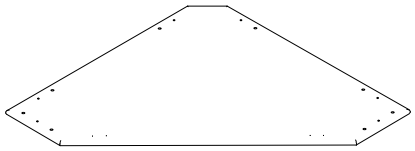 Middle Shelf	I x 2 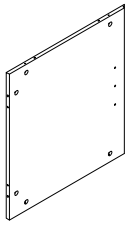 Lower Side Panel
C x 2 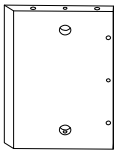 Upper Front Side Vertical Rail	J x 1  Lower Rear Vertical Rail
D x 1 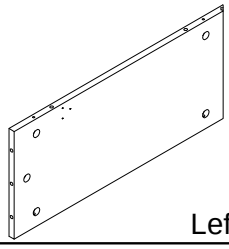 Left Upper Side Panel	K x 2 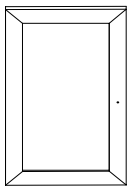 Door
E x 1 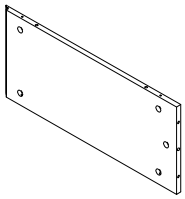 Right Upper Side Panel	L x 1 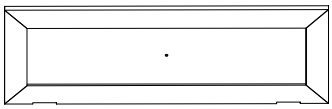 Flip-Down Panel
F x 1 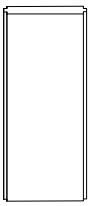 Upper Rear Vertical Rail	M x 1 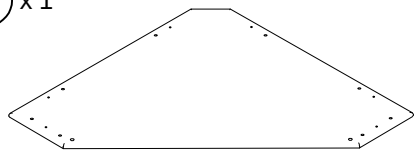 Bottom Panel
G x 1 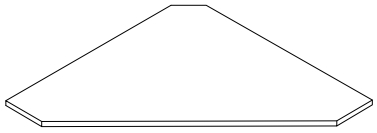 Adjustable Shelf	N x 1 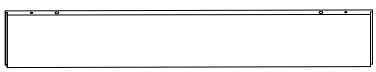 Base Front Rail

PART LIST

O x 1 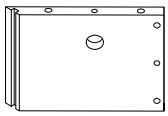 Left Front Base Side Rail	Q x 1 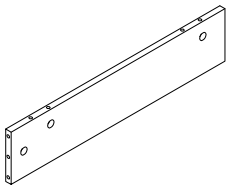 Left Base Side Rail
P x 1 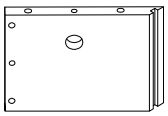 Right Front Base Side Rail	R x 1 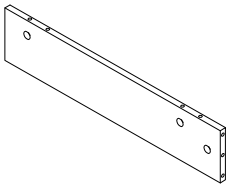 Right Base Side Rail

HARDWARE LIST

1 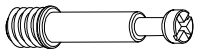 Ø6x35mm Cam Bridge 40 pcs	2  Ø15x9mm Cam Head 40 pcs	3 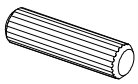 Ø6 x 30 mm Wood dowel 54 pcs
4 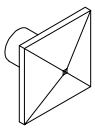 Knob 3pcs	5 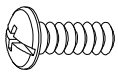 M4 x 10 mm Bolt 1 pc	6 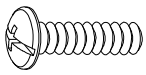 M4 x 15 mm Bolt 2 pcs
7 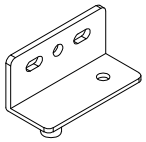 Left Hinge 2 pcs	8 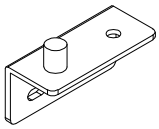 Right Hinge 2 pcs	9 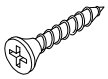 M3.5x12mm Wood Screw 17 pcs
10 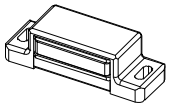 Magnetic Catch 3pcs	11 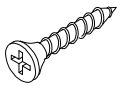 M3x15mm Wood Screw 6 pcs	12  Metal Plate 3pcs
13  M3x10mm Wood Screw 6 pcs	14 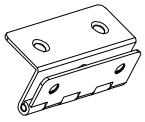 Hinge 2pcs	15  M3x12mm Wood Screw 8 pcs
16 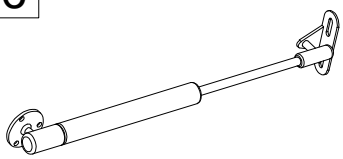 Hydraulic Lifting Arm 1pc	17  Shelf Pin 4 pcs	18 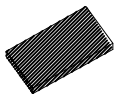 Felt Pad 4 pcs
19 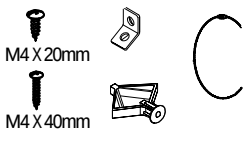 M4 X 20mm M4 X 40mm FURNITURE TIP OVER RESTRAINT QTY 2 SET		

ASSEMBLY TOOLS REQUIRED (NOT INCLUDED)

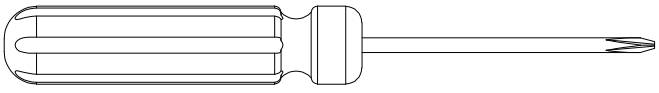

STEP 1:

Following below illustration

-Using hardware #1 connect A.
-Using hardware #11 connect #10 with A.

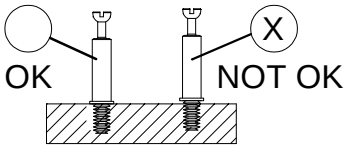

1	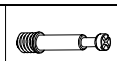	6
10		1
11		2

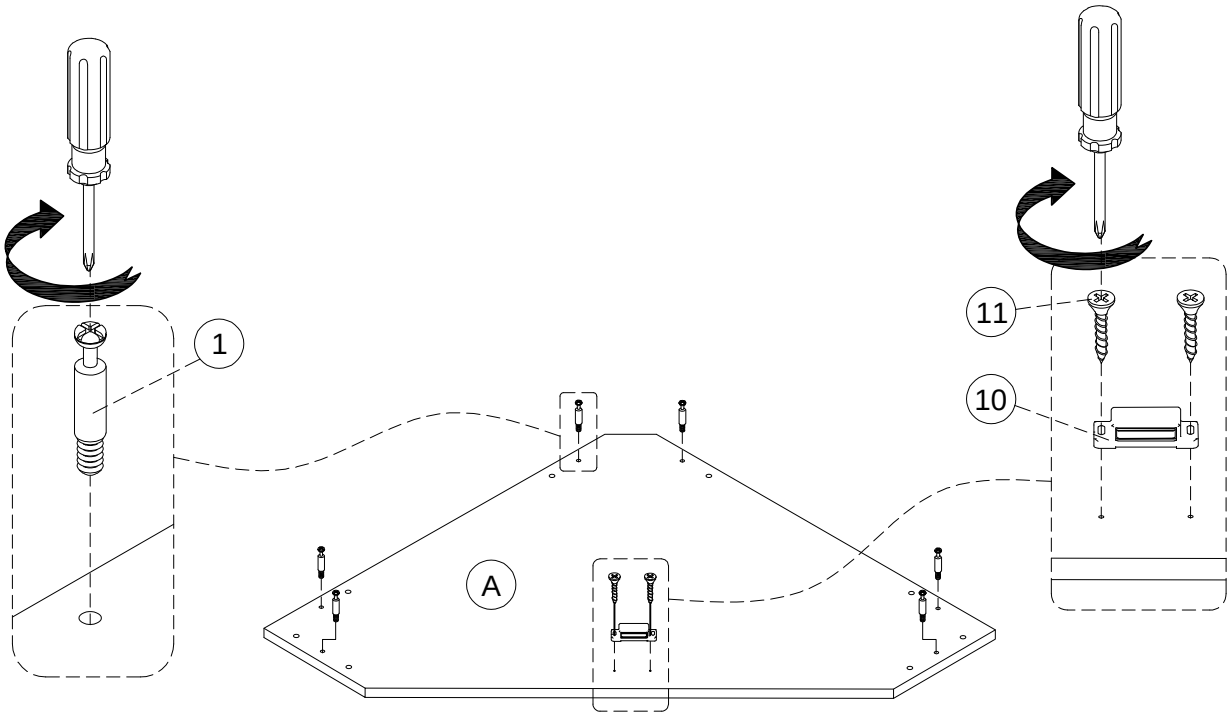

STEP 2:

Following below illustration

-Using hardware #1 connect B.
-Using hardware #11 connect #10 with B.

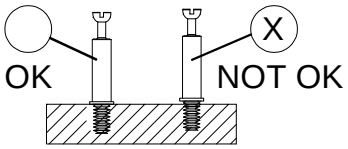

1	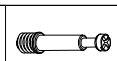	6
10		2
11		4

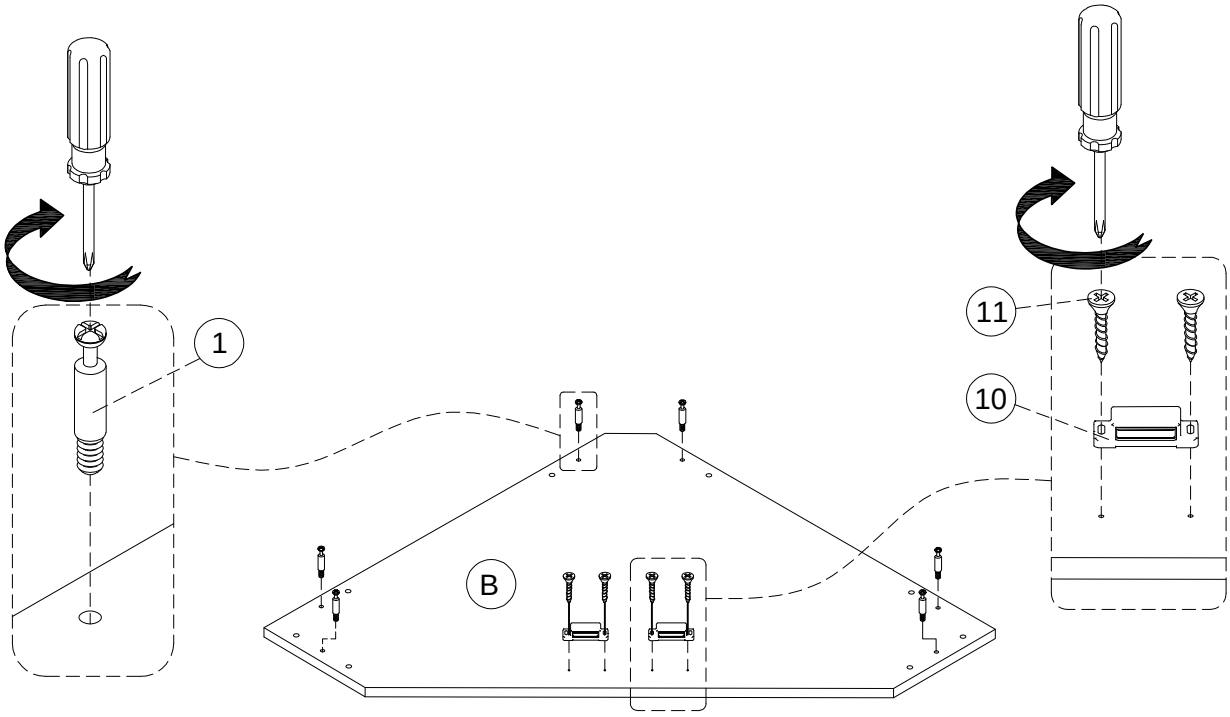

STEP 3:

Following below illustration

-Using hardware #1 connect M.

1		8

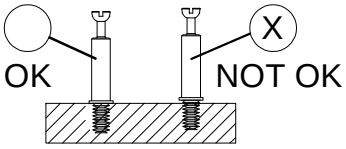

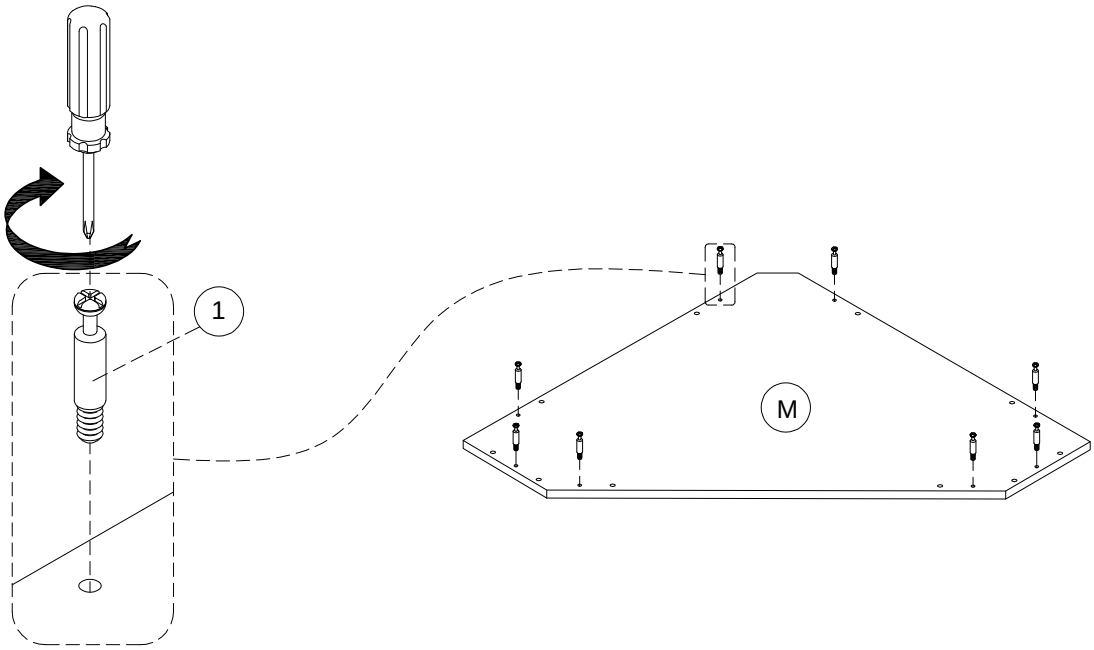

STEP 4:

Following below illustration

-Using hardware #1 connect C,H.

1	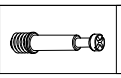	6

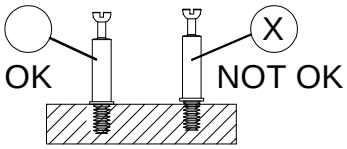

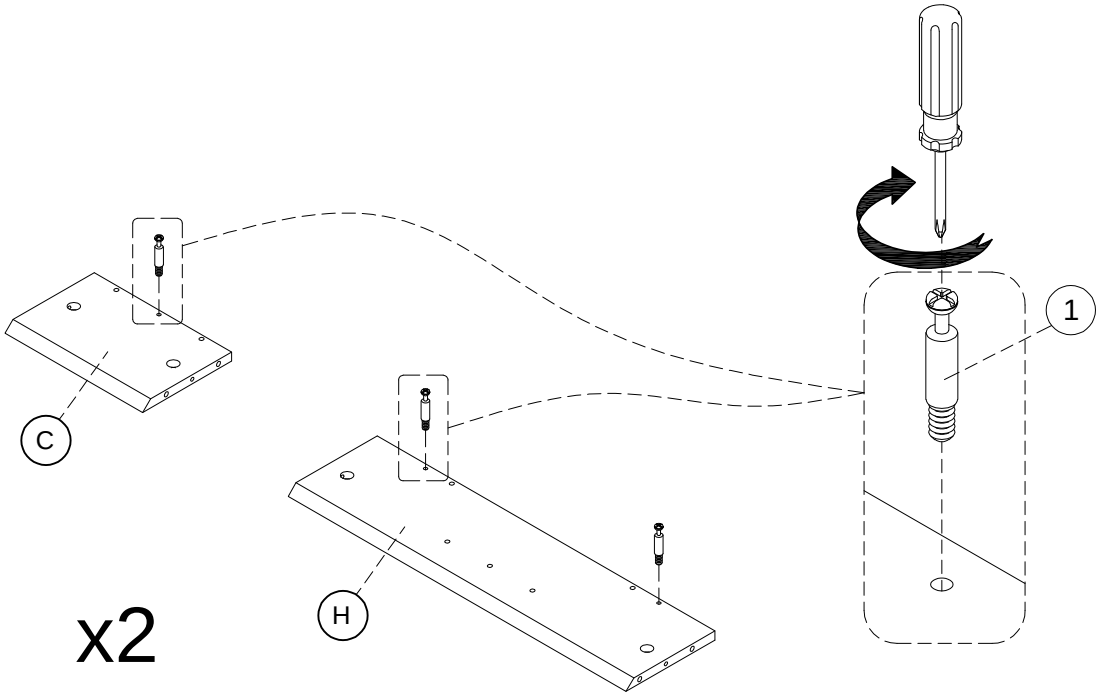

x2

1	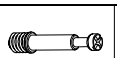	2

STEP 5:

Following below illustration

-Using hardware #1 connect O,P.

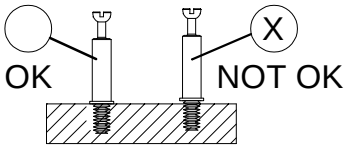

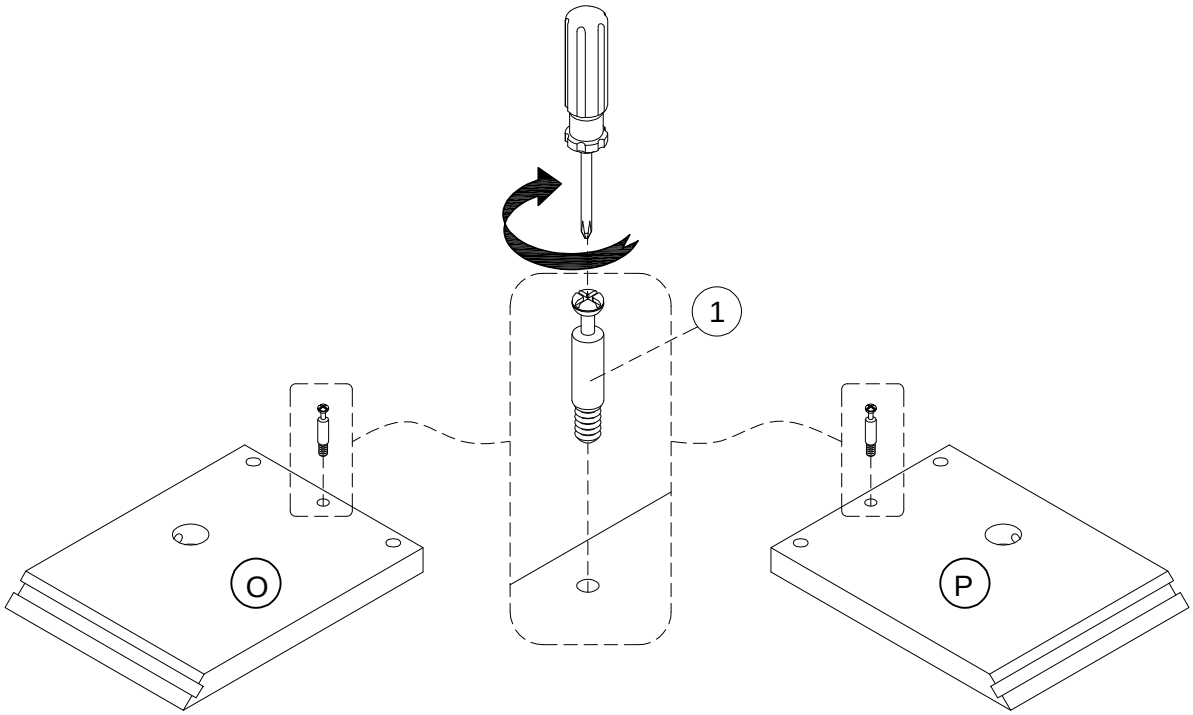

2		1
3		2

STEP 6:

Following below illustration

-Using hardware #2,#3 connect O,Q.

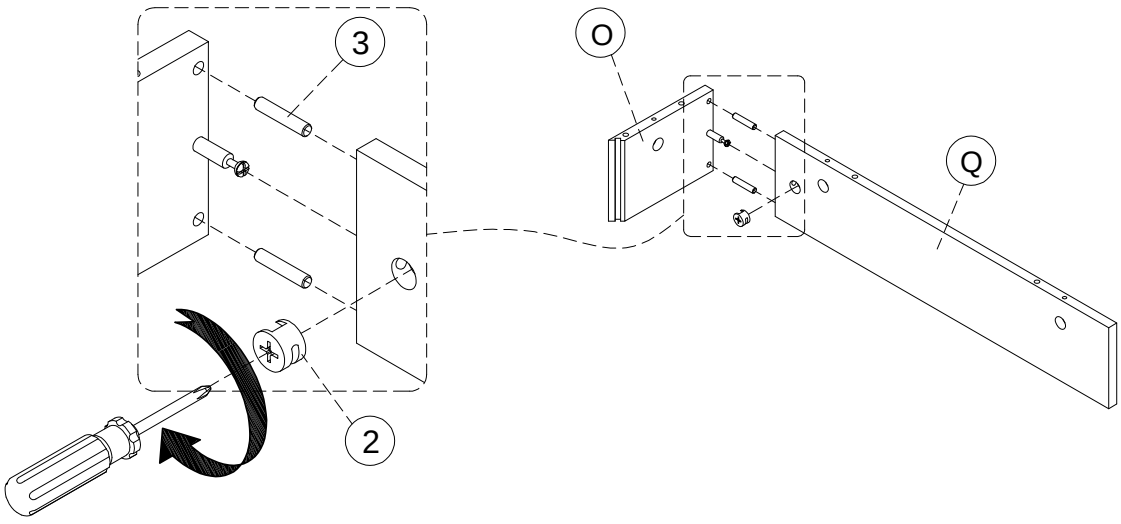

STEP 7: Following below illustration

-Using hardware #2,#3 connect P,R.

2		1
3		2

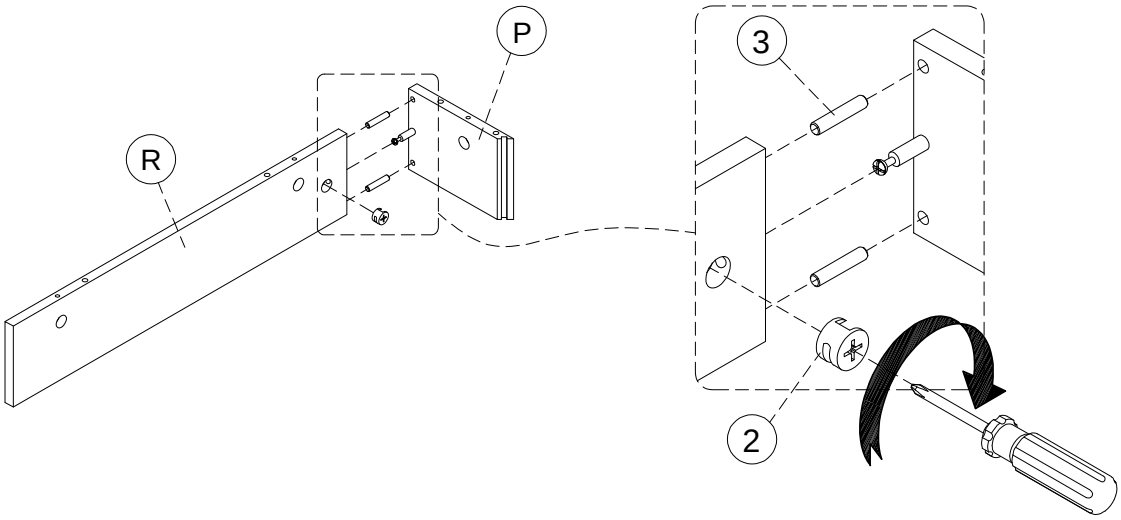

STEP 8: Following below illustration

-Using hardware #2,#3 connect Step 6 with Step 3.

2		3
3		4

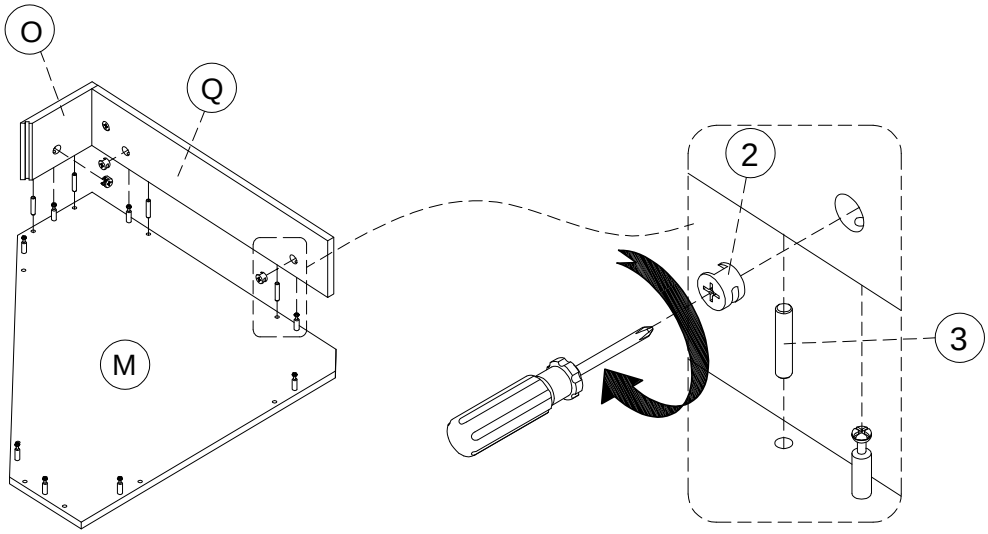

STEP 9:

Following below illustration

-Using hardware #2,#3 connect Step 7 with Step 8.

2		3
3		4

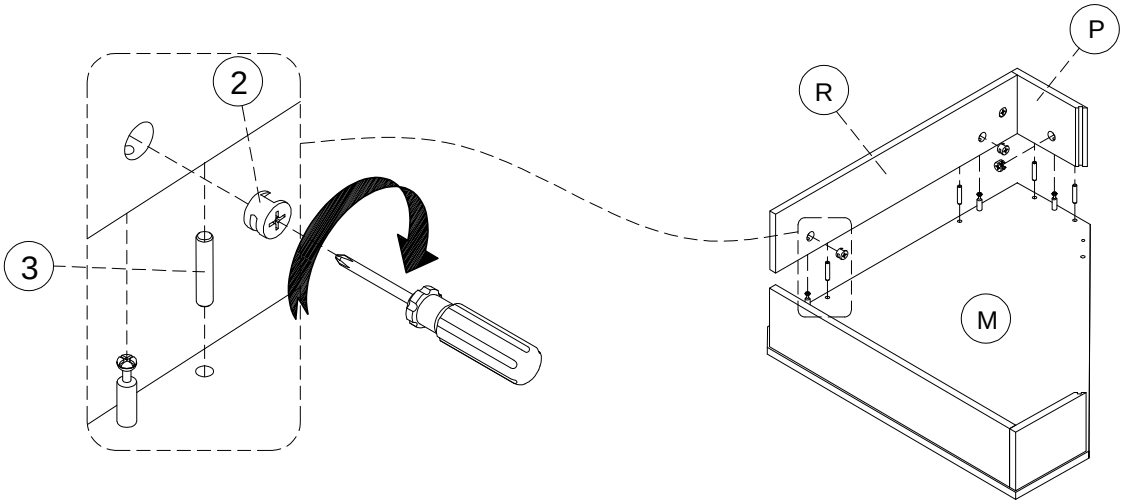

STEP 10:

Following below illustration

-Using hardware #2 #3 connect N with Step 9.

-Using hardware #18 connect Step 9, N.

2		2
3		2
18		4

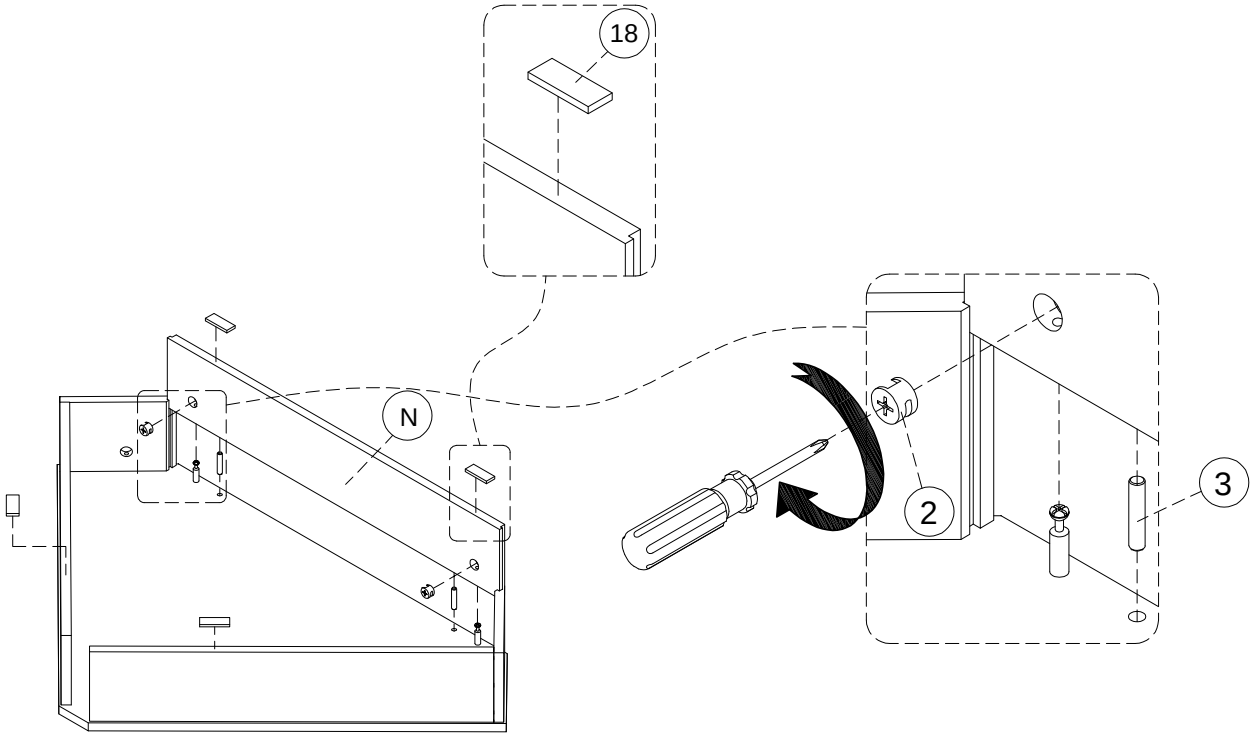

2		4
3		4

STEP 11: Following below illustration

-Using hardware #2, #3 connect H with I.

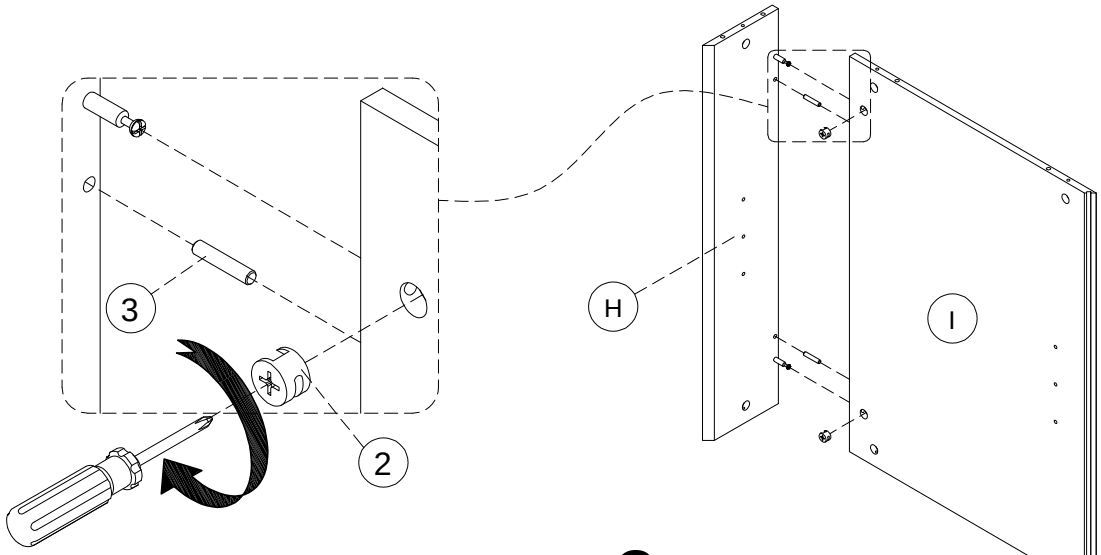

x 2

1	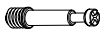	6

STEP 12: Following below illustration

-Using hardware #1 connect Step 10.

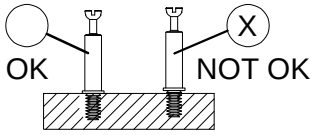

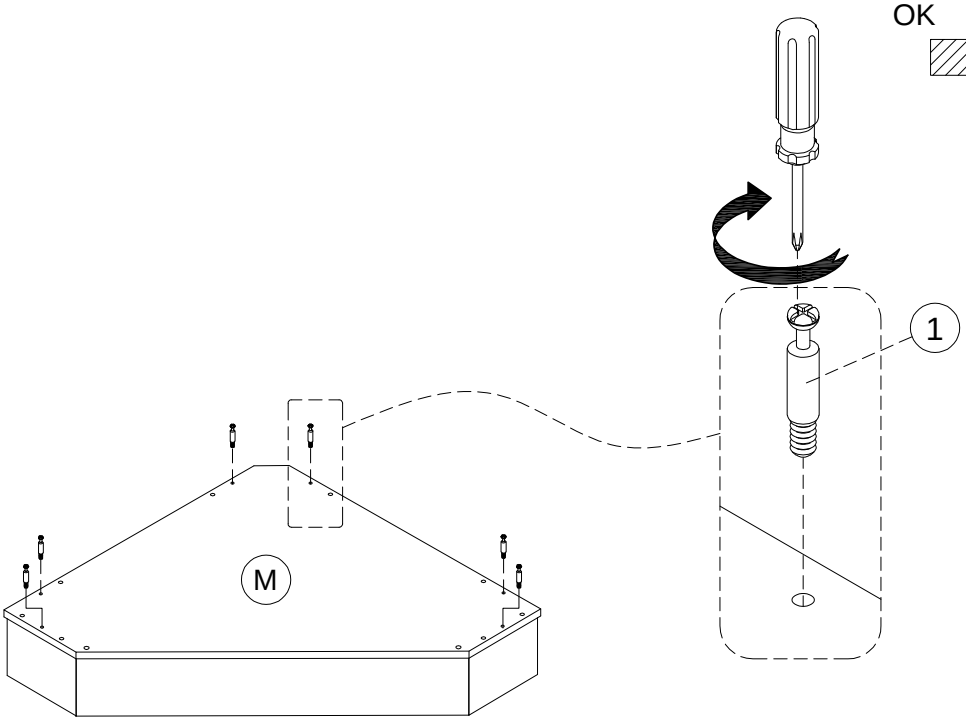

STEP 13: Following below illustration

-Using hardware #2, #3 connect Step 11 with Step 12.

2		6
3		8

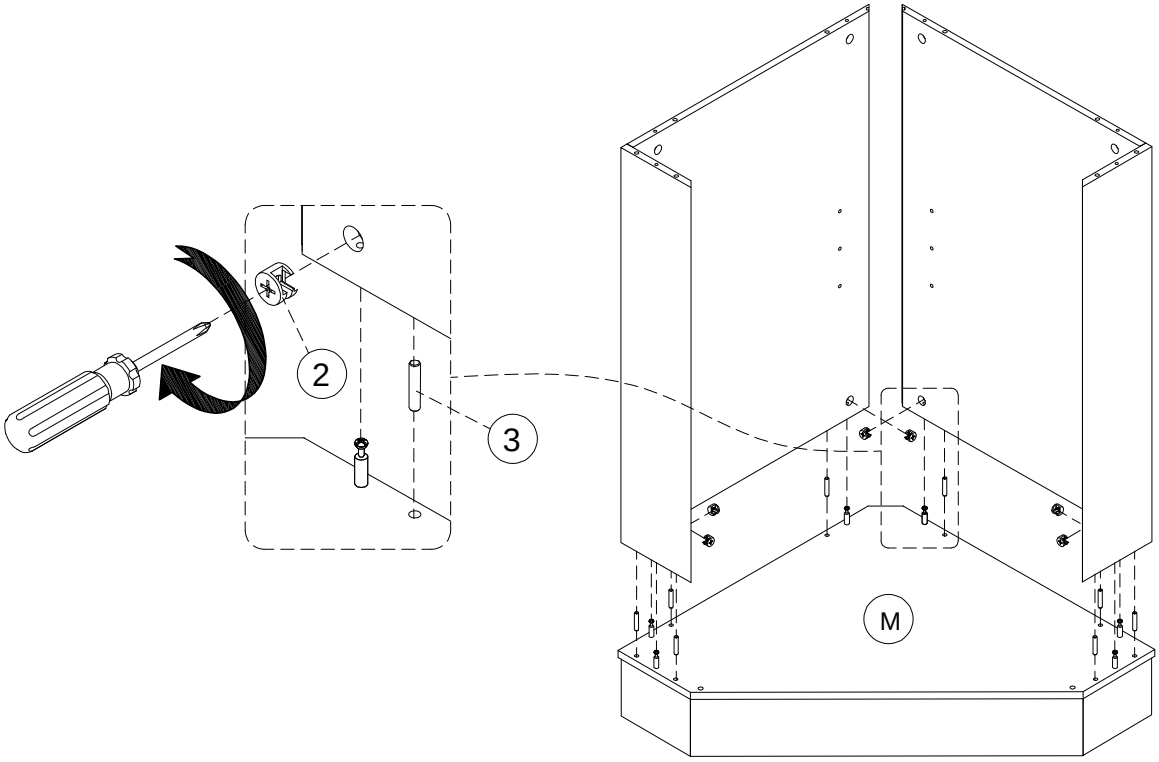

STEP 14: Following below illustration

-Using Lower Rear Vertical Rail (J) connect Step 13.

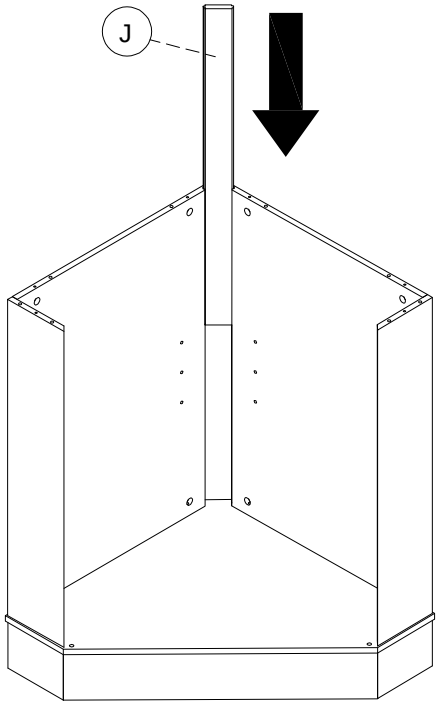

7	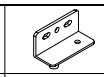	2
8		2

9	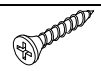	12
12		2
13	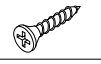	4

STEP 15:

-Using hardware #13 connect #12 with K.
-Using hardware #9 connect #7 with K.
-Using hardware #9 connect #8 with K.

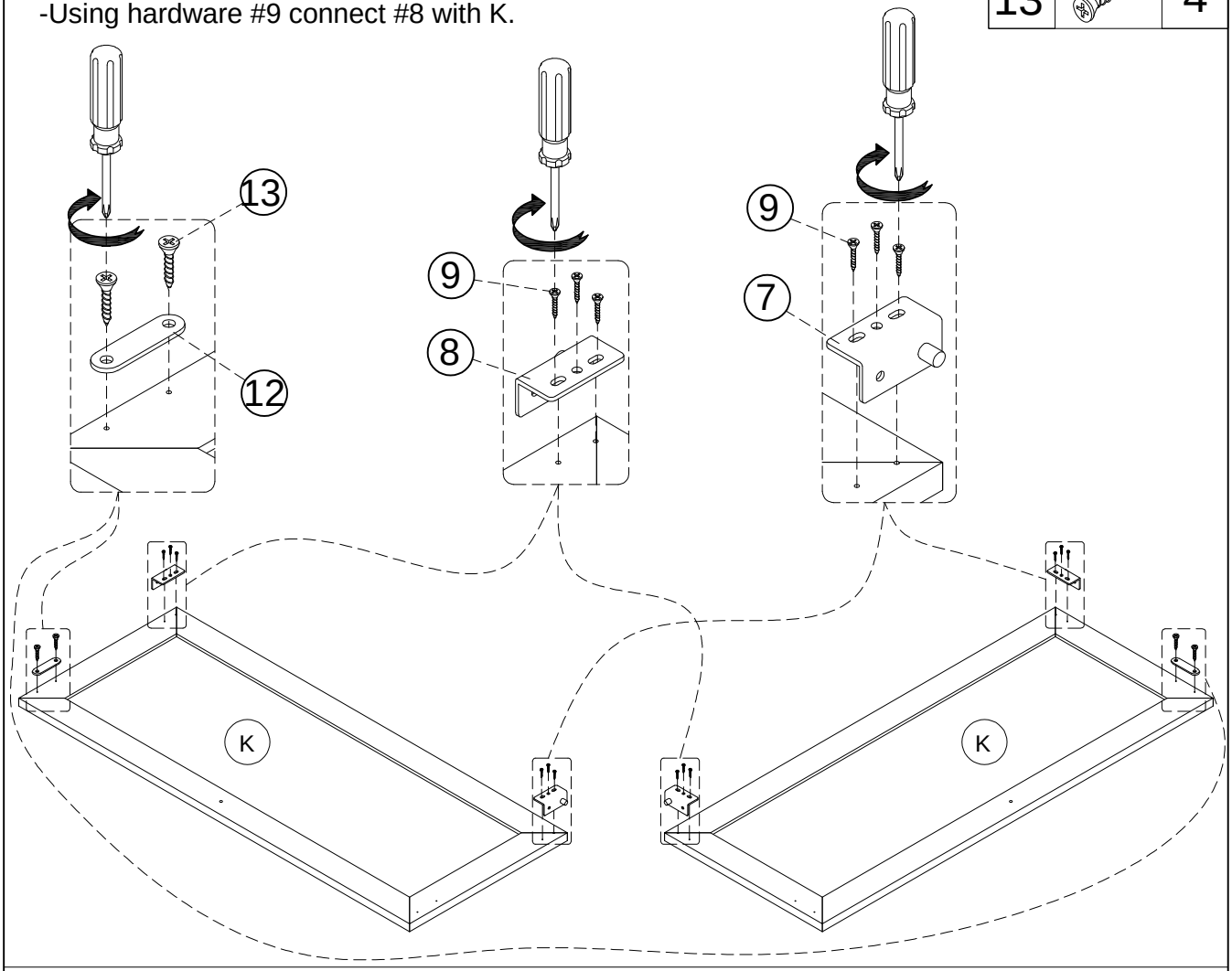

STEP 16:

-Using Door (K) connect Step 14.

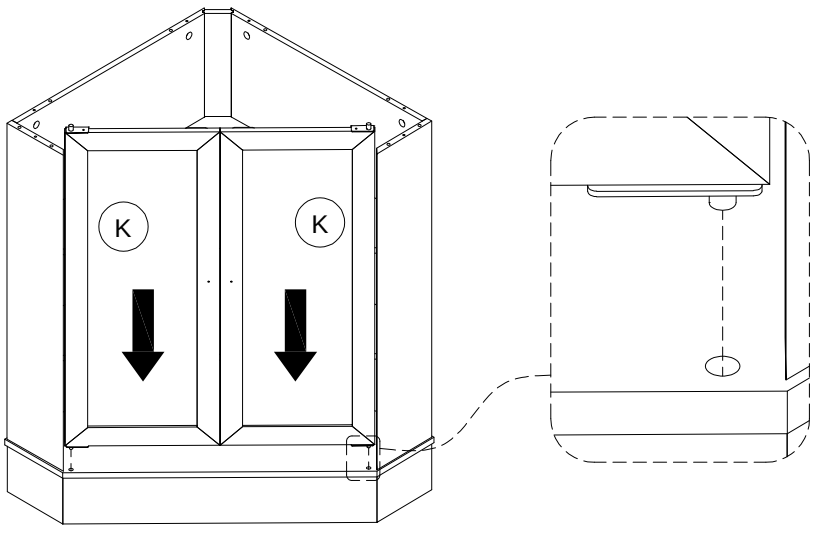

STEP 17:

-Using hardware #2, #3 connect Step 2 with Step 16.

2		6
3		8

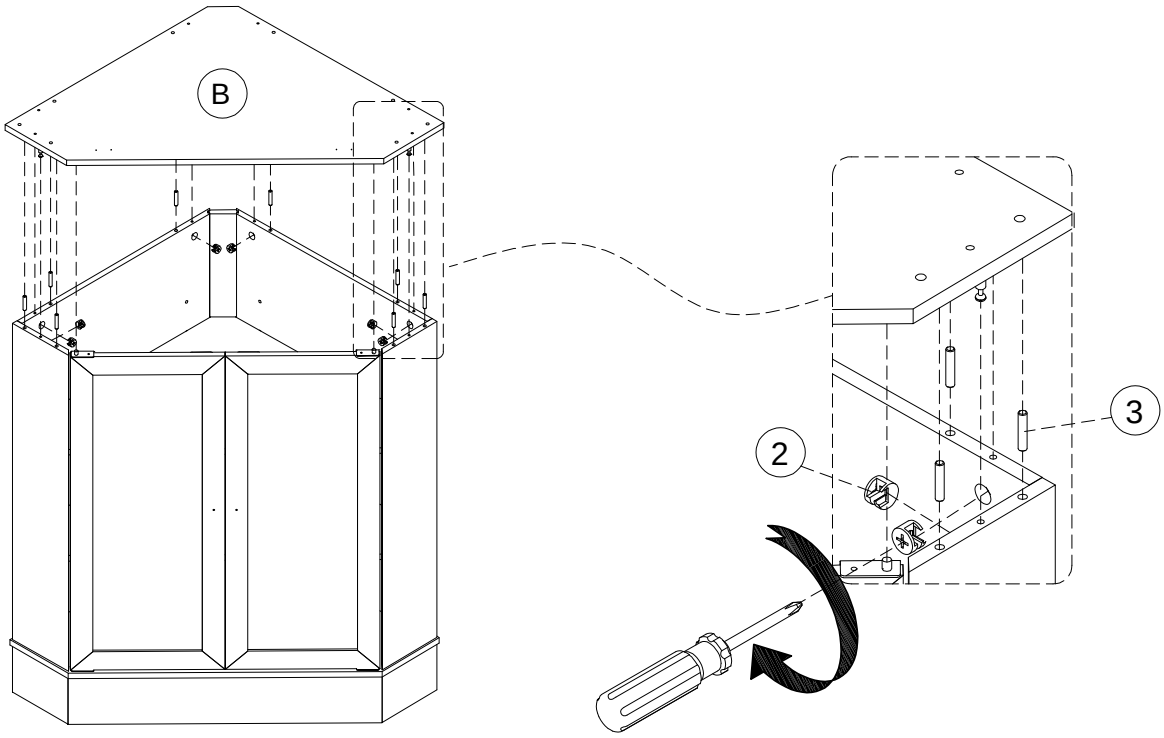

STEP 18:

-Using hardware #6 connect #4 with Step 17.

4		2
6	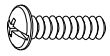	2

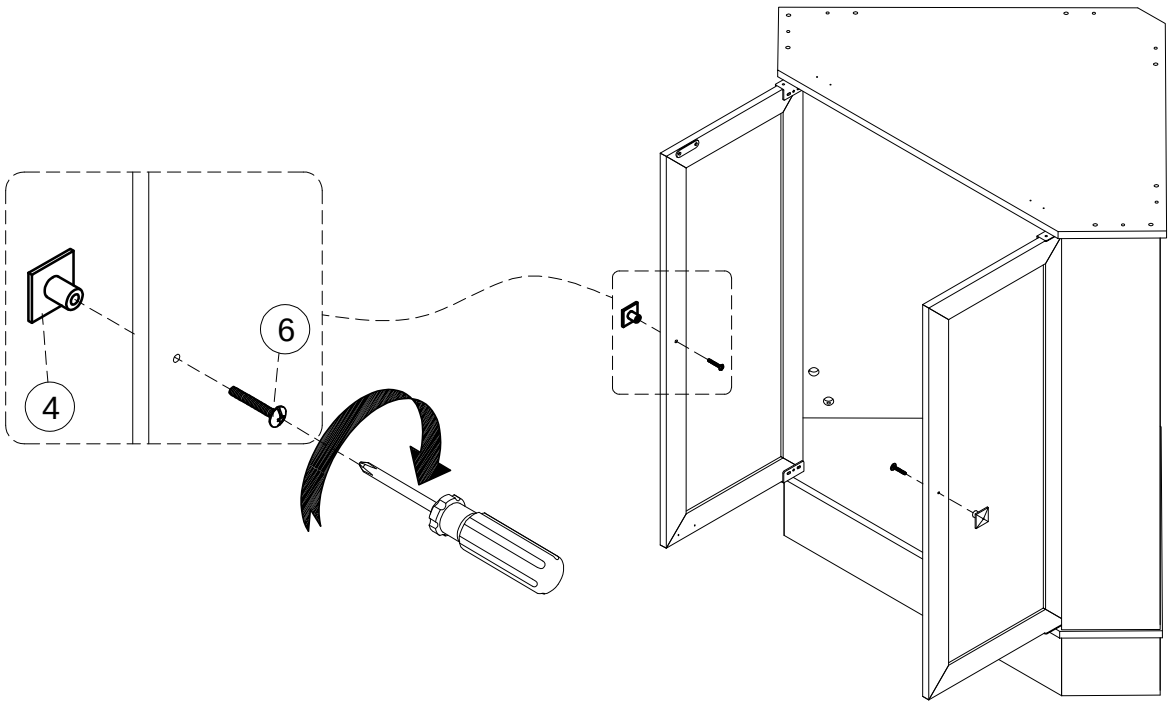

17		4

STEP 19:

-Using hardware #17 connect G with Step 18.

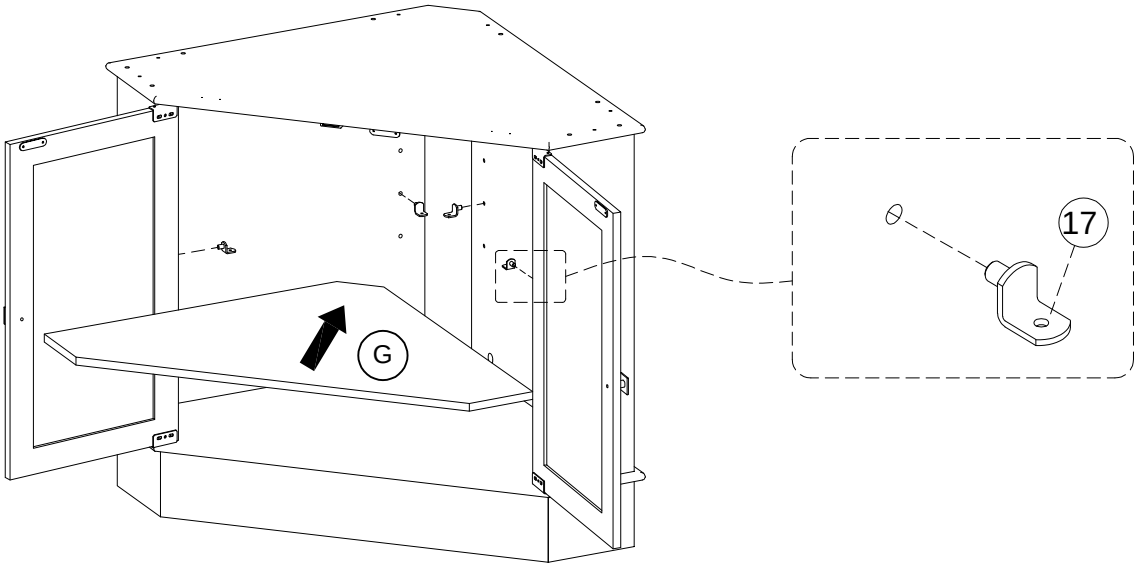

1		6

STEP 20:

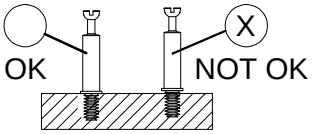

-Using hardware #1 connect Step 19.

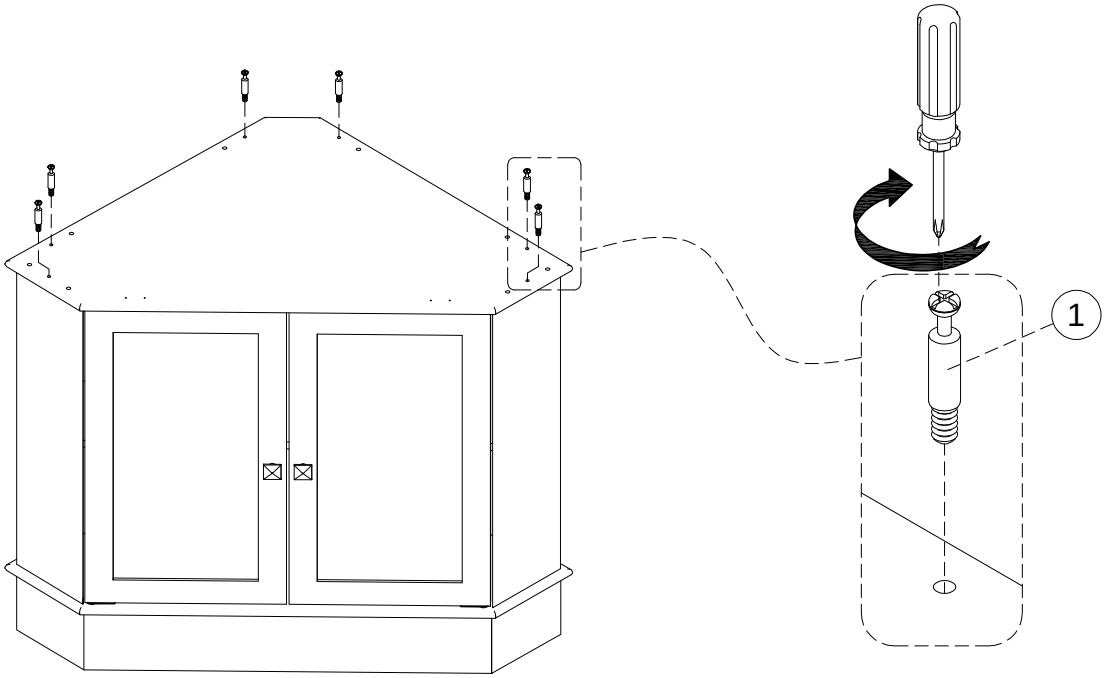

STEP 21:

-Using hardware #2,#3 connect C,D.

2		1
3		2

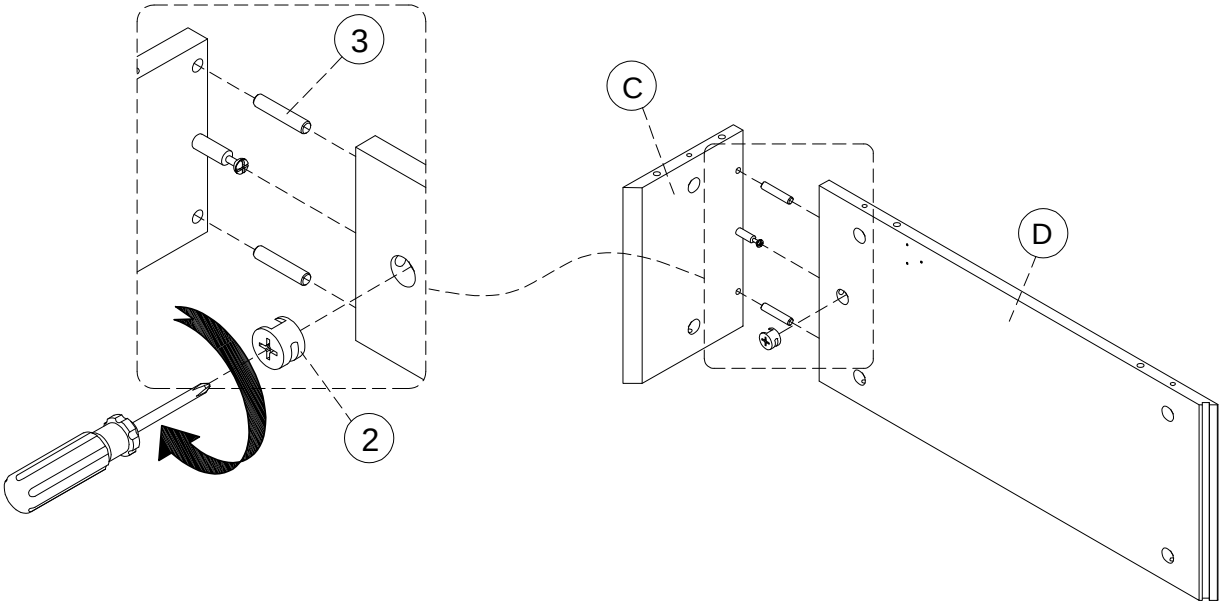

STEP 22:

-Using hardware #2,#3 connect C,E.

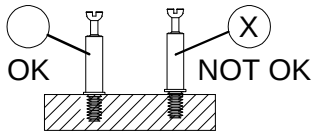

2		1
3		2

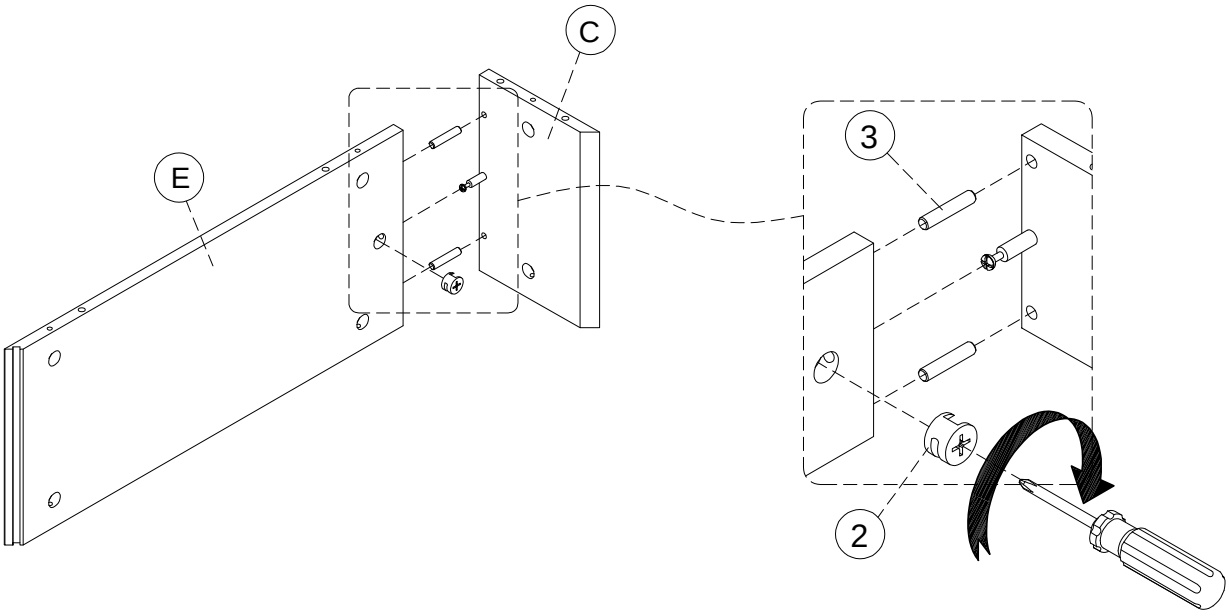

2		6
3		8

STEP 23: Following below illustration

-Using hardware #2, #3 connect Step 21, Step 22 with Step 20.

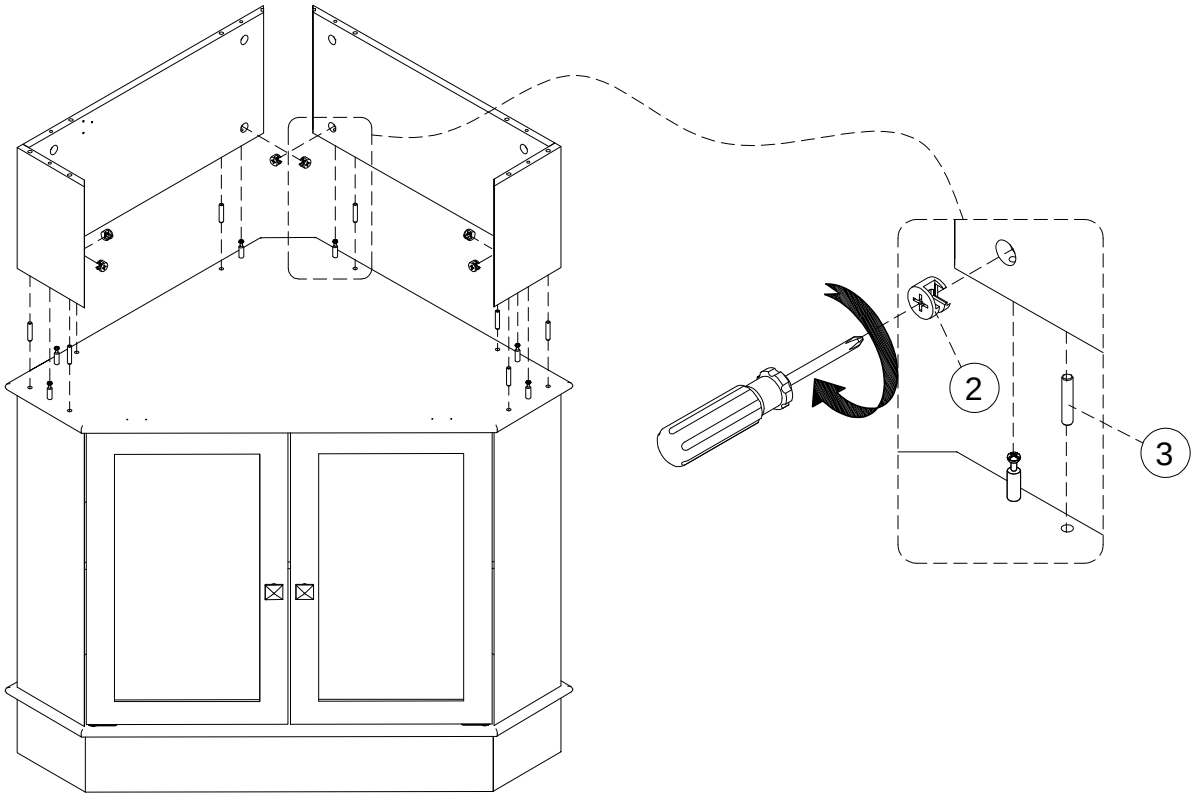

STEP 24: Following below illustration

-Using Upper Rear Vertical Rail (F) connect Step 13.

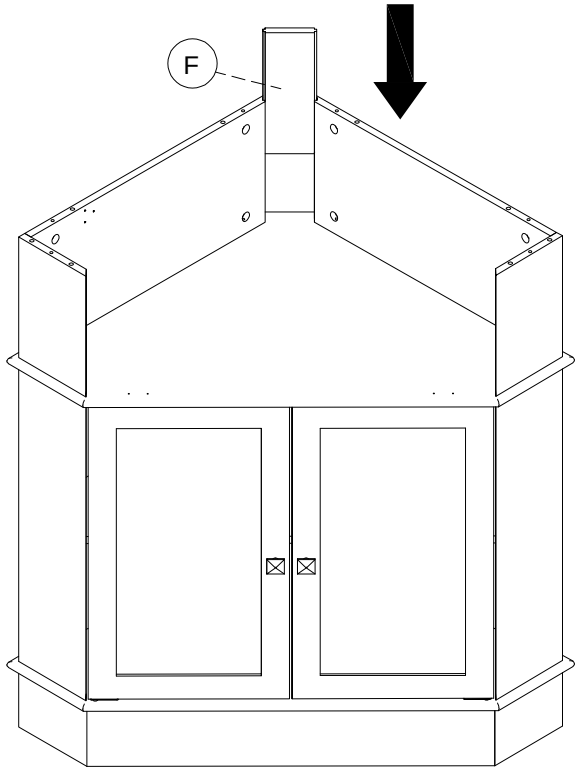

12	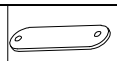	1	14		2
13		2	15	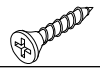	4

STEP 25: Following below illustration

-Using hardware #13 connect #12 with L.
-Using hardware #15 connect #14 with L.

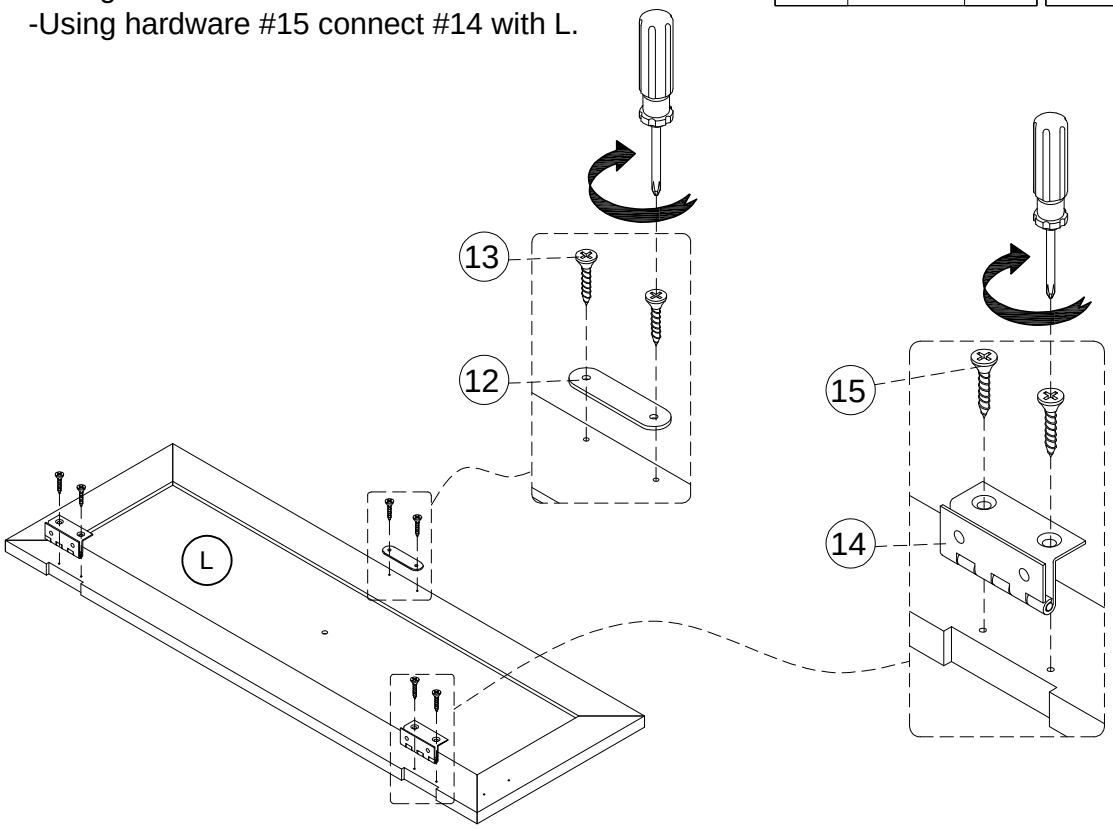

15	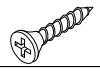	4

STEP 26: Following below illustration

-Using hardware #15 connect Step 25 with Step 24.

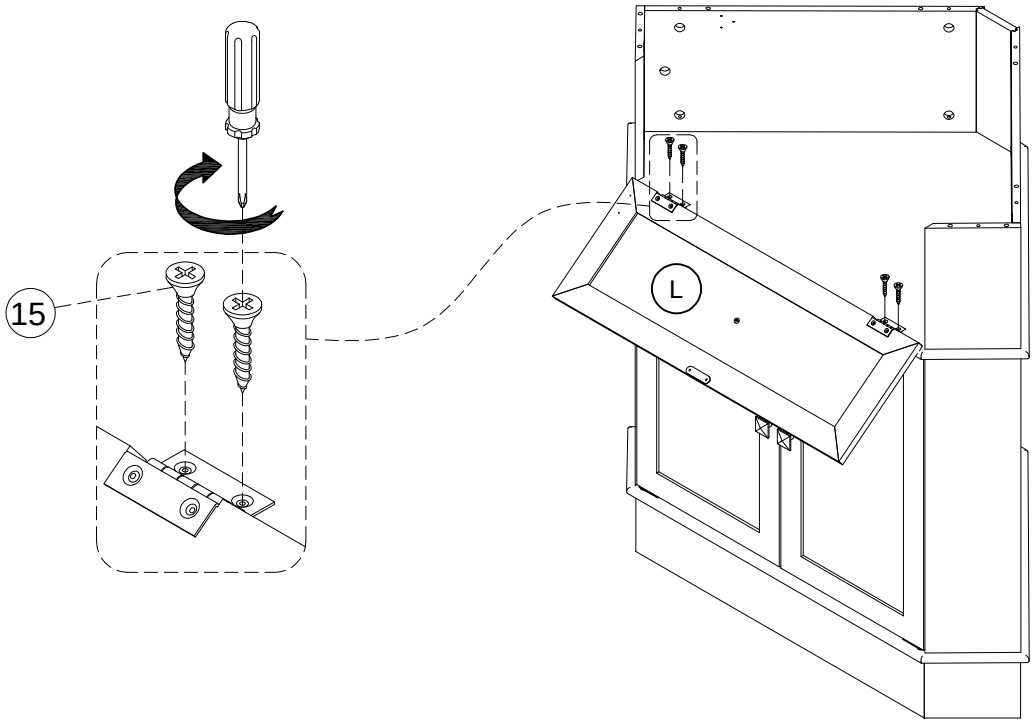

9	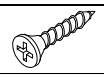	5
16	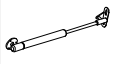	1

STEP 27: Following below illustration

-Using hardware #9 connect #16 with Step 26.

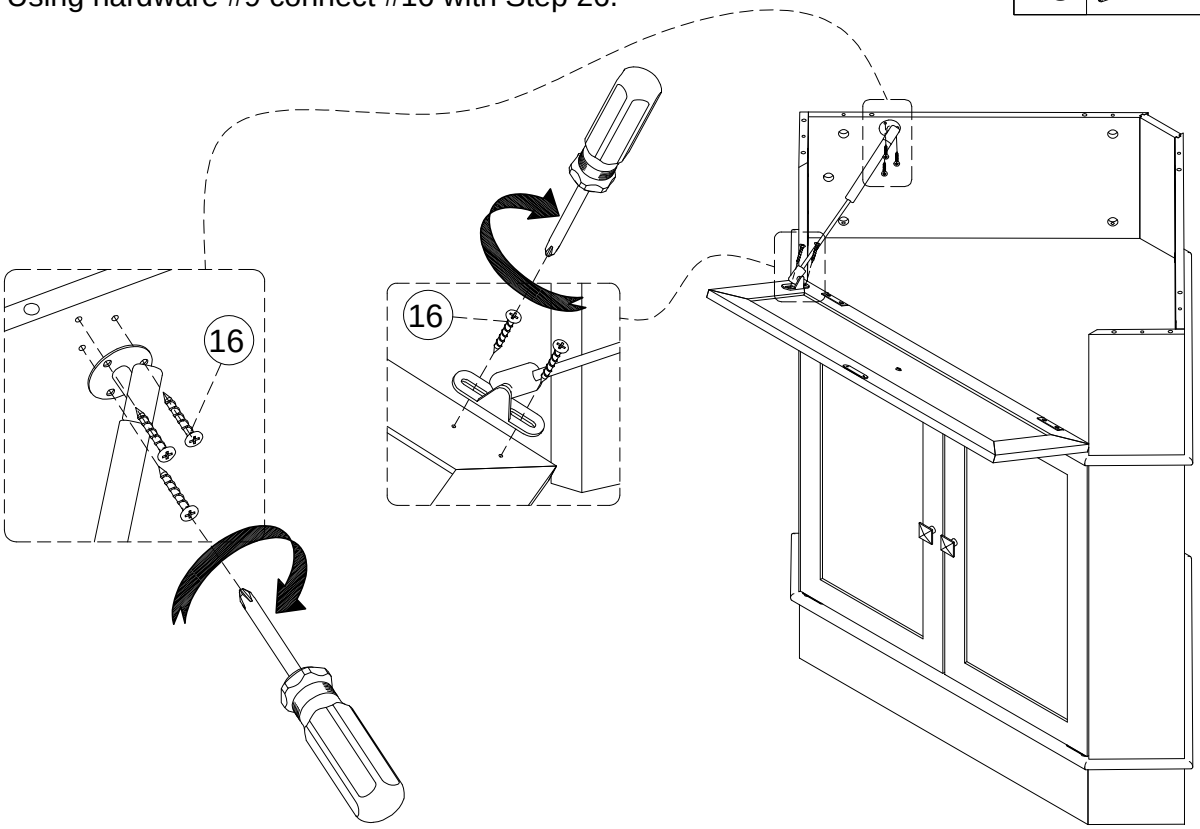

4		1
5	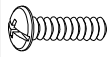	1

STEP 28: Following below illustration

-Using hardware #5 connect #4 with Step 27.

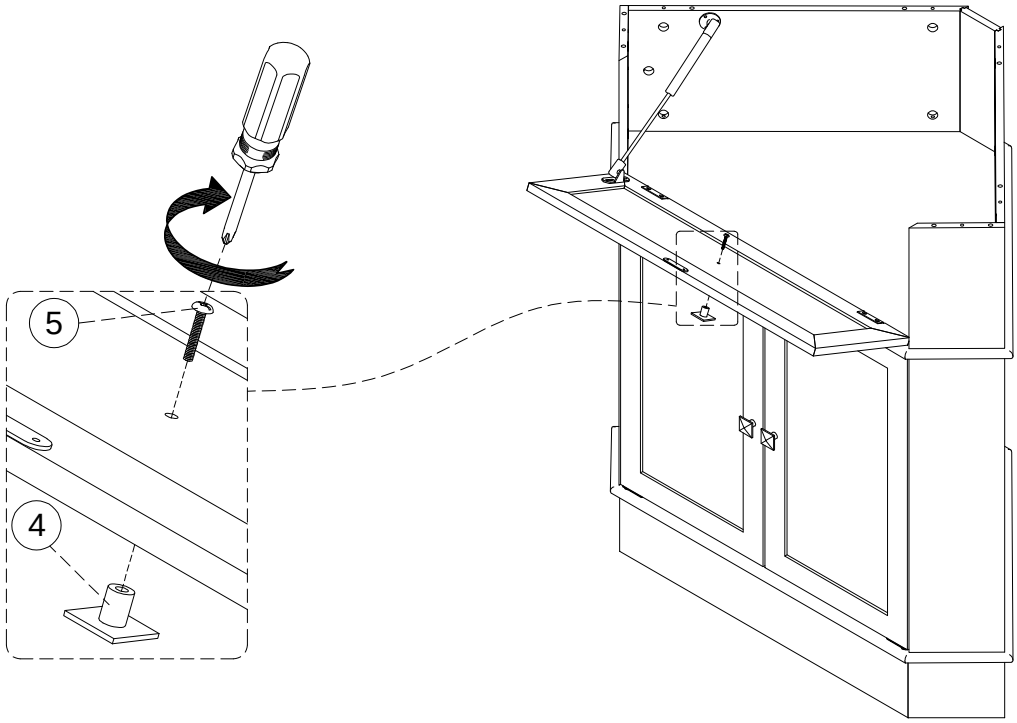

STEP 29: Following below illustration

-Using hardware #2, #3 connect A with Step 28.

2		6
3		8

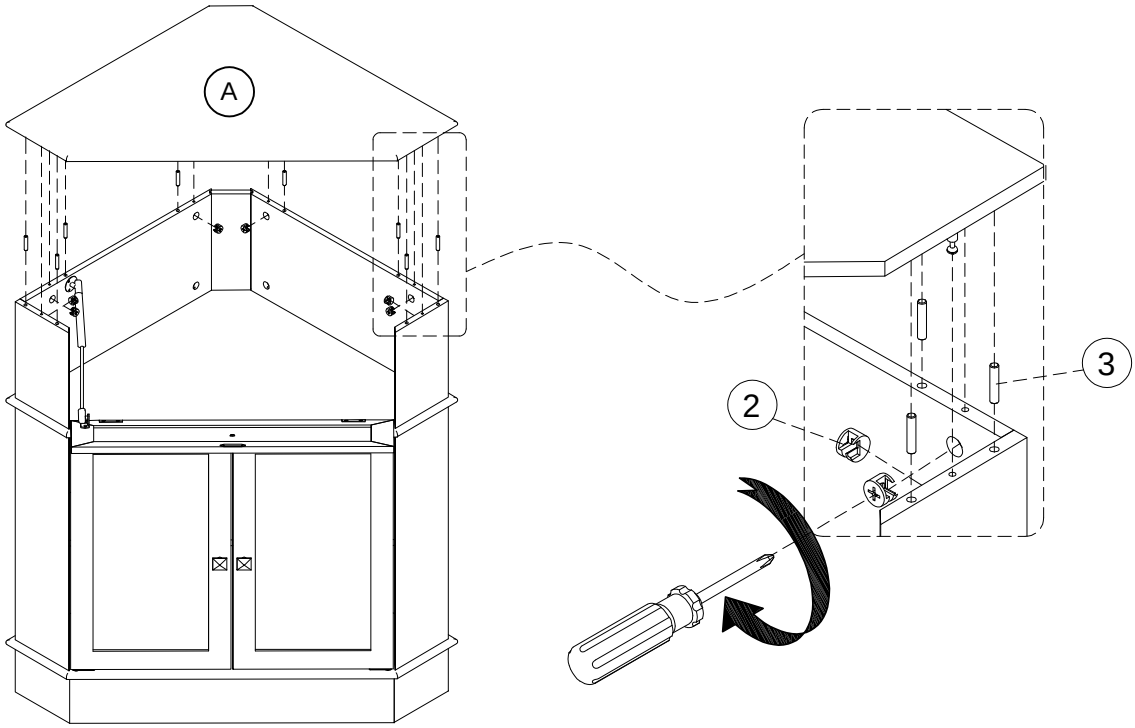

STEP 30: Following below illustration

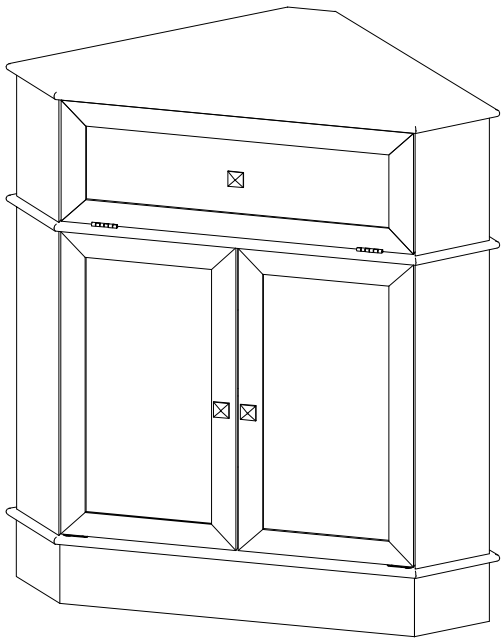

WARNING

Serious or fatal crushing injuries can occur from furniture tip-over.
If the furniture tip over restraint kit is not in the box, please contact our customer service department in order to obtain another kit before using the furniture.

A1		4	D1		2
B1	M4 X 20mm	2			
C1	M4 X 40mm	2	E1		2

NOTE: The screwdriver is not included in the hardware pack.

