ASSEMBLY INSTRUCTION

ITEM : N725P497043

STORAGE CABINET

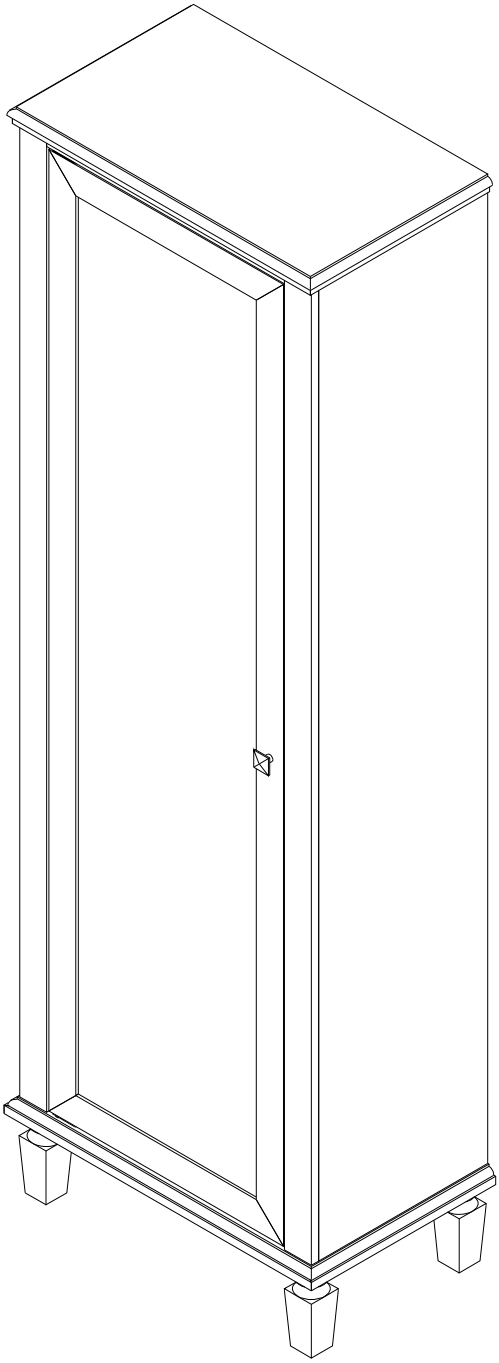

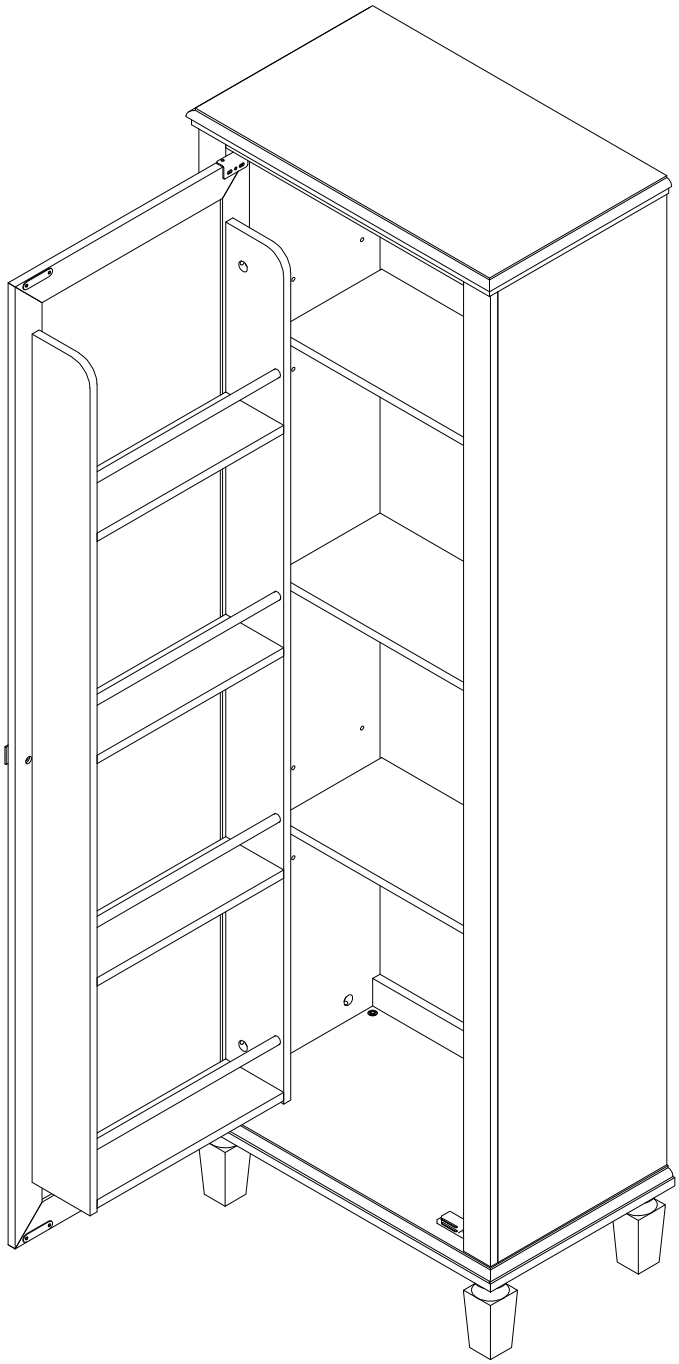

ASSEMBLY INSTRUCTION

ITEM : N725P497043

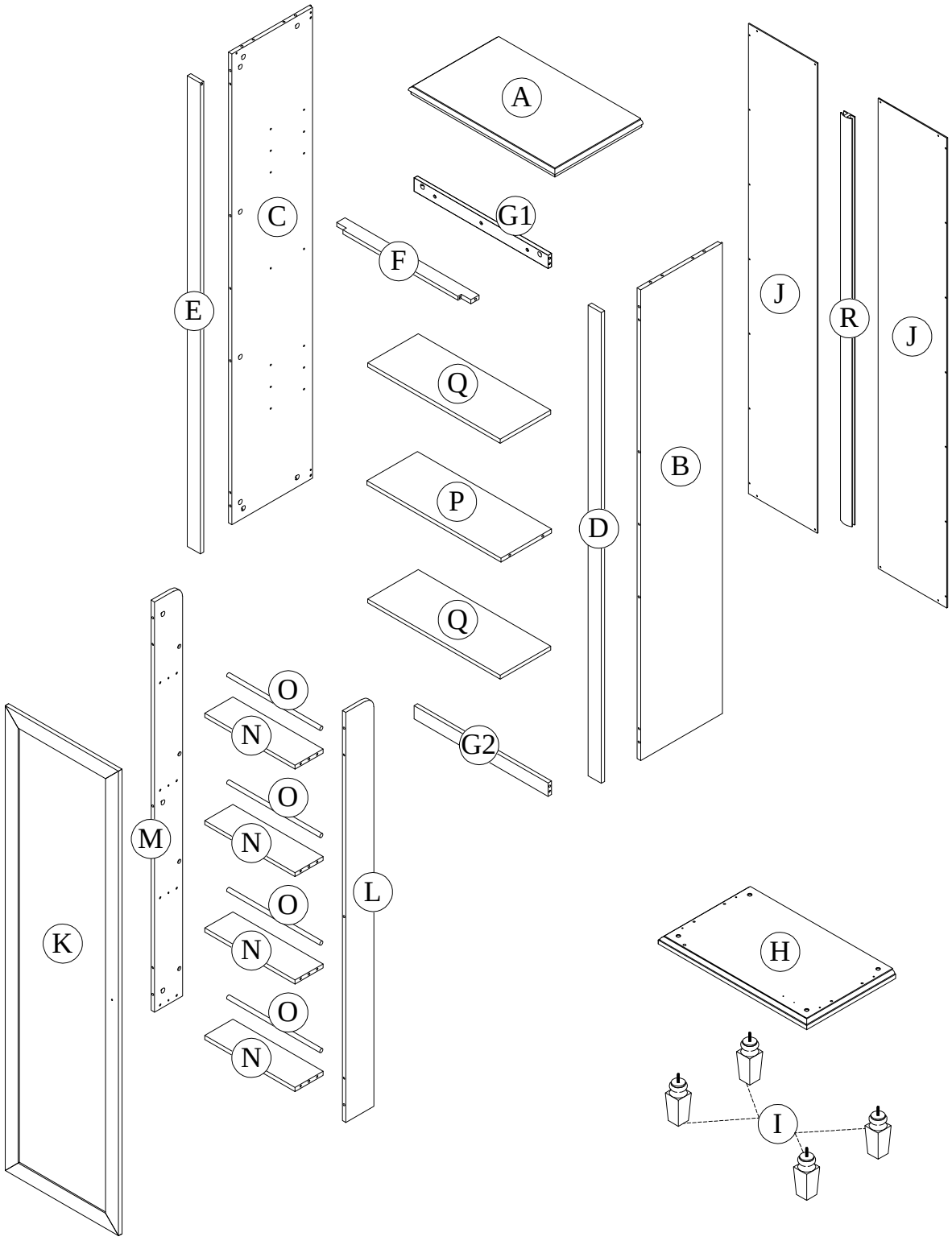

PART LIST

A x 1 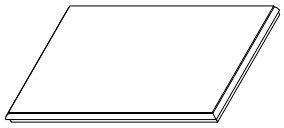 Top Panel	B x 1  Right Side Panel
C x 1 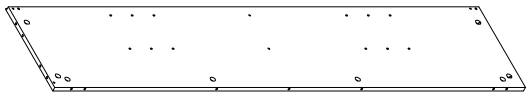 Left Side Panel	D x 1 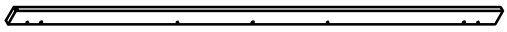 Front Right Bar
E x 1  Front left bar	F x 1 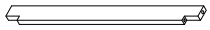 Front Crossbar
G1 x 1 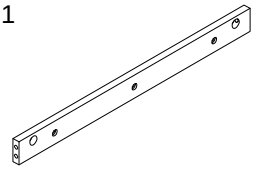 Upper Back Crossbar	G2 x 1 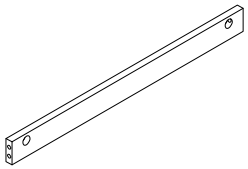 Lower Back Crossbar
H x 1 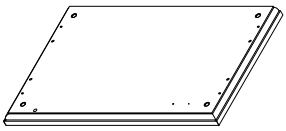 Bottom Panel	I x 4  Cabinet Legs
J x 2 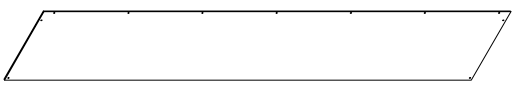 Back Panels	K x 1 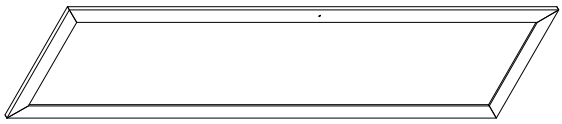 Door
L x 1  Right Side Panel of Door Shelf	M x 1  Left Side Panel of Door Shelf

PART LIST

N x 4 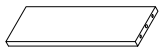 Shelf of Door Shelf	O x 4 Bar of Door Shelf
P x 1 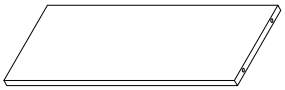 Shelf of Cabinet	Q x 2  Adjustable Shelf of Canbinet
R x 1  Plastic trim	

HARDWARE LIST

1 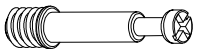 Ø6x35mm Cam Bridge 40 pcs	2  Ø15x9mm Cam Head 40 pcs	3 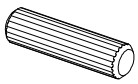 Ø6 x 30 mm Wood dowel 40 pcs
4 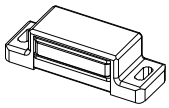 Magnetic Catch 2pcs	5  Metal Plate 2pcs	6 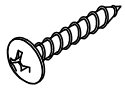 M3x15mm Screw round head 22pcs
7 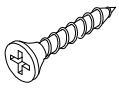 M3x15mm Wood Screw 4 pcs	8  M3x10mm Wood Screw 4 pcs	9 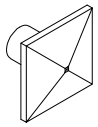 Door Knob 1pc
10  Shelf Pin 8 pcs	11 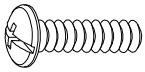 M4 x 15 mm Bolt 1 pc	12 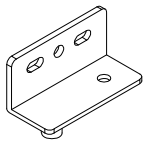 Left Hinge 1 pc
13 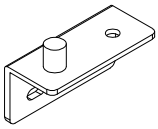 Right Hinge 1 pc	14 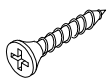 M3.5x12mm Wood Screw 6 pcs	15 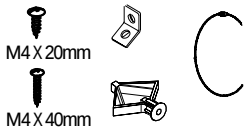 M4 X 20mm M4 X 40mm FURNITURE TIP OVER RESTRAINT QTY 2 SET
16 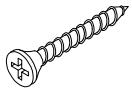 M4x40mm Wood Screw 3 pcs	E1 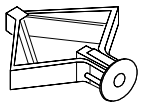 Plastic Anchor 3 pcs	

ASSEMBLY TOOLS REQUIRED (NOT INCLUDED)

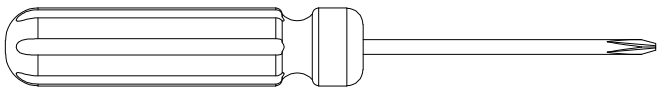

1	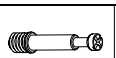	18

STEP 1:

Following below illustration

-Using hardware #1 connect B,C,D,E.

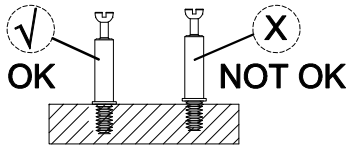

STEP 2:

Following below illustration

-Using hardware #2, #3 connect B with D, C with E.

2		8
3		6

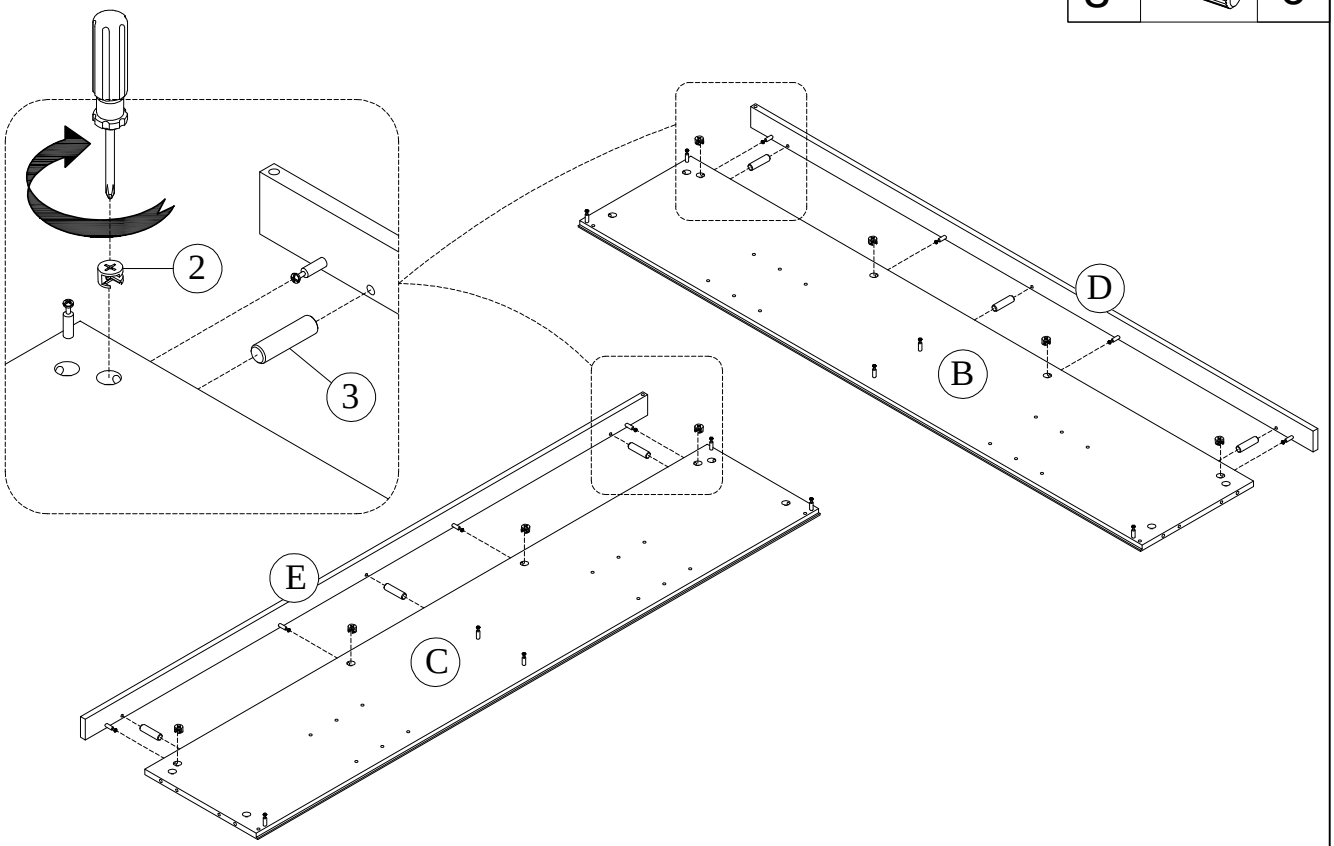

STEP 3:

Following below illustration

-Using hardware #2,#3 connect F,G1,G2,P with Step 2.

2		10
3	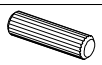	6

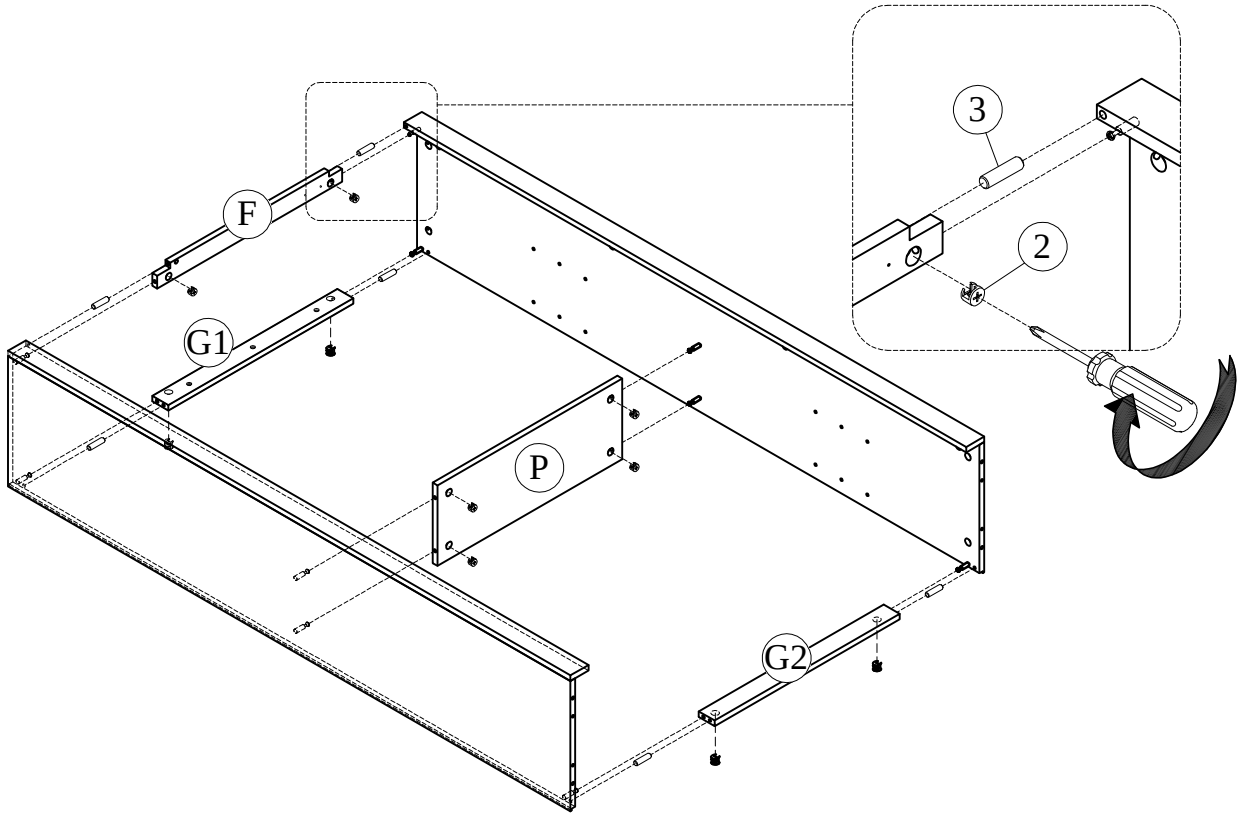

STEP 4:

Following below illustration

-Using hardware #7 connect #4 with F.

4	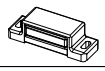	1
7		2

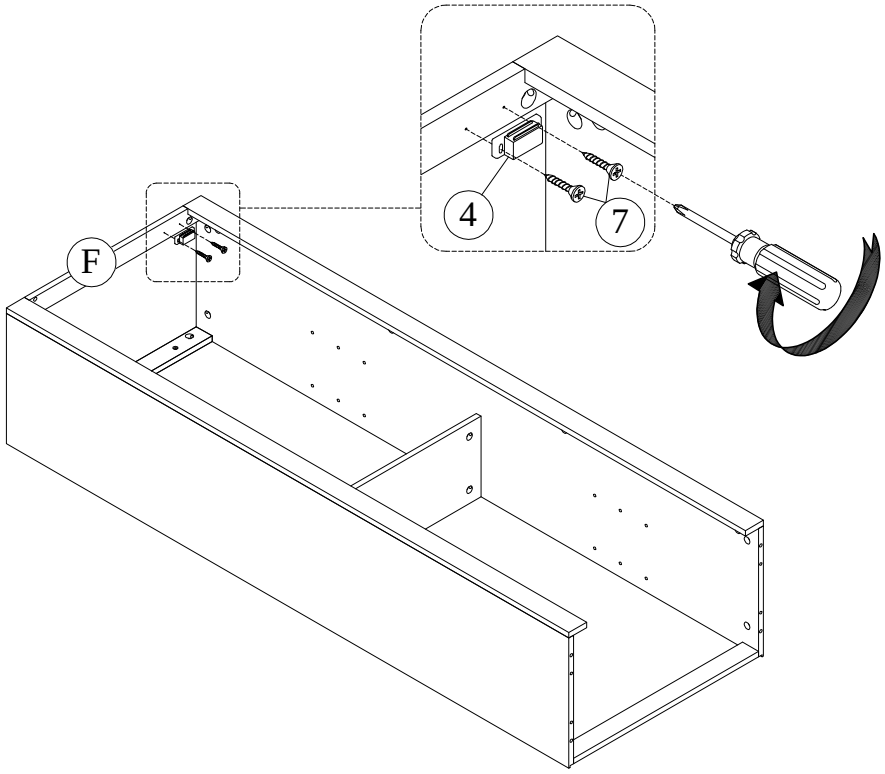

1		6

STEP 5:

Following below illustration

-Using hardware #1 connect K.

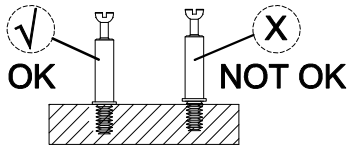

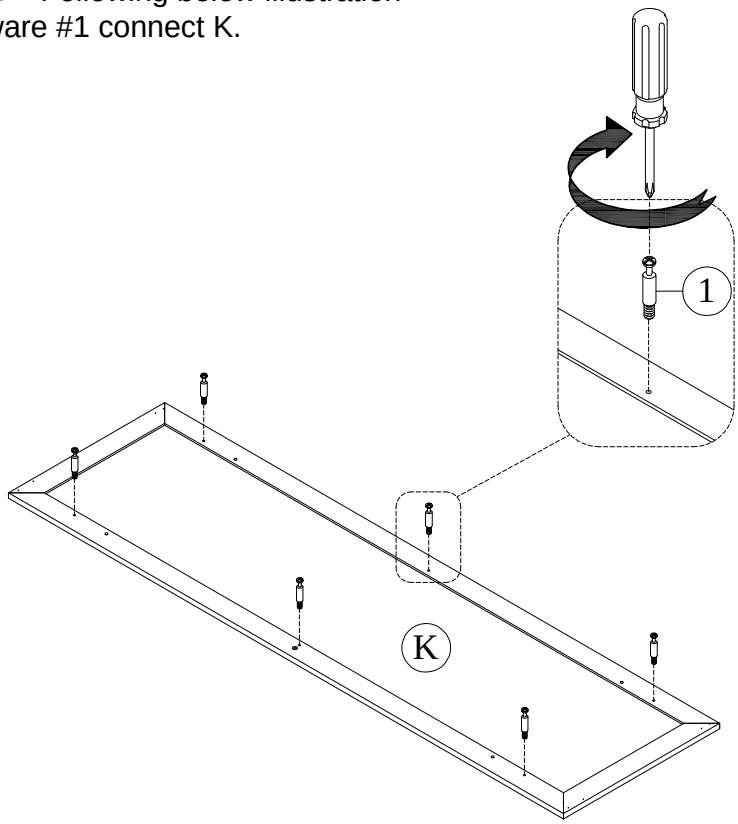

5		2	12		1
8		4	13		1
			14		6

STEP 6:

Following below illustration

-Using hardware #8 connect #5 with K.

-Using hardware #14 connect #12 with K.

-Using hardware #14 connect #13 with K.

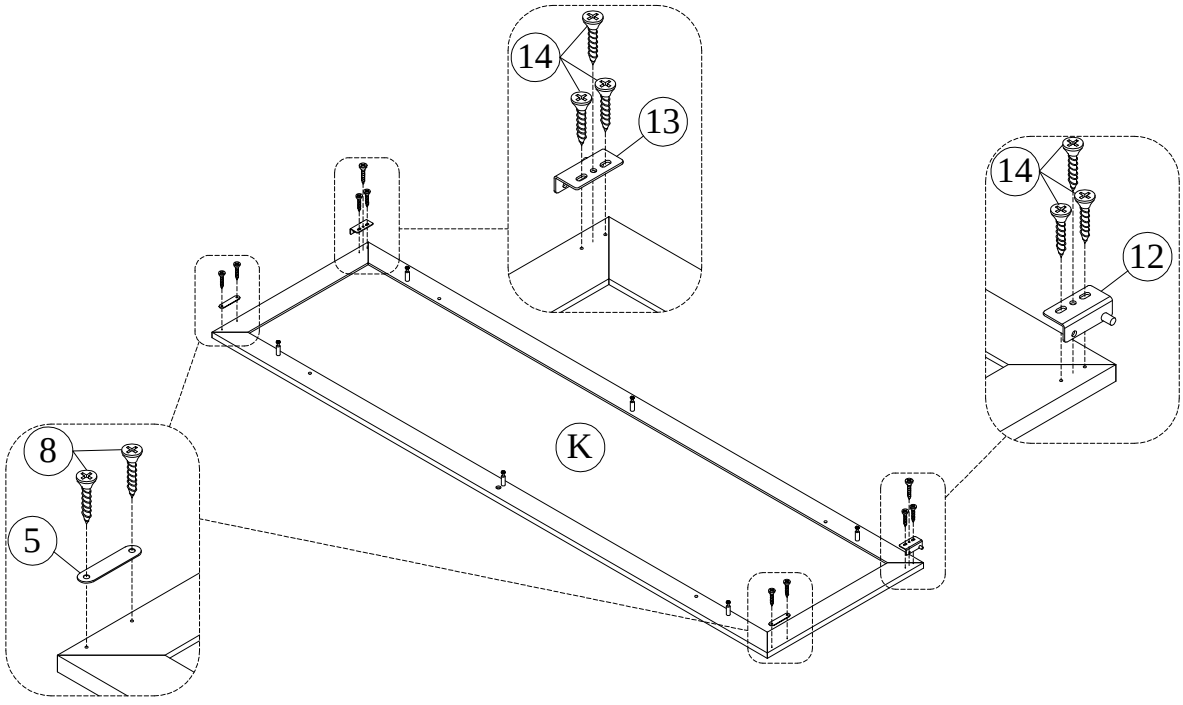

STEP 7:

Following below illustration

-Using hardware #1 connect L,M.

1	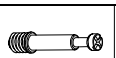	8

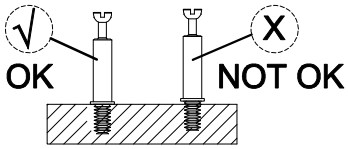

STEP 8:

Following below illustration

-Using hardware #2,#3 connect N with L,M.

-Using connect O with L,M.

2		8
3		16

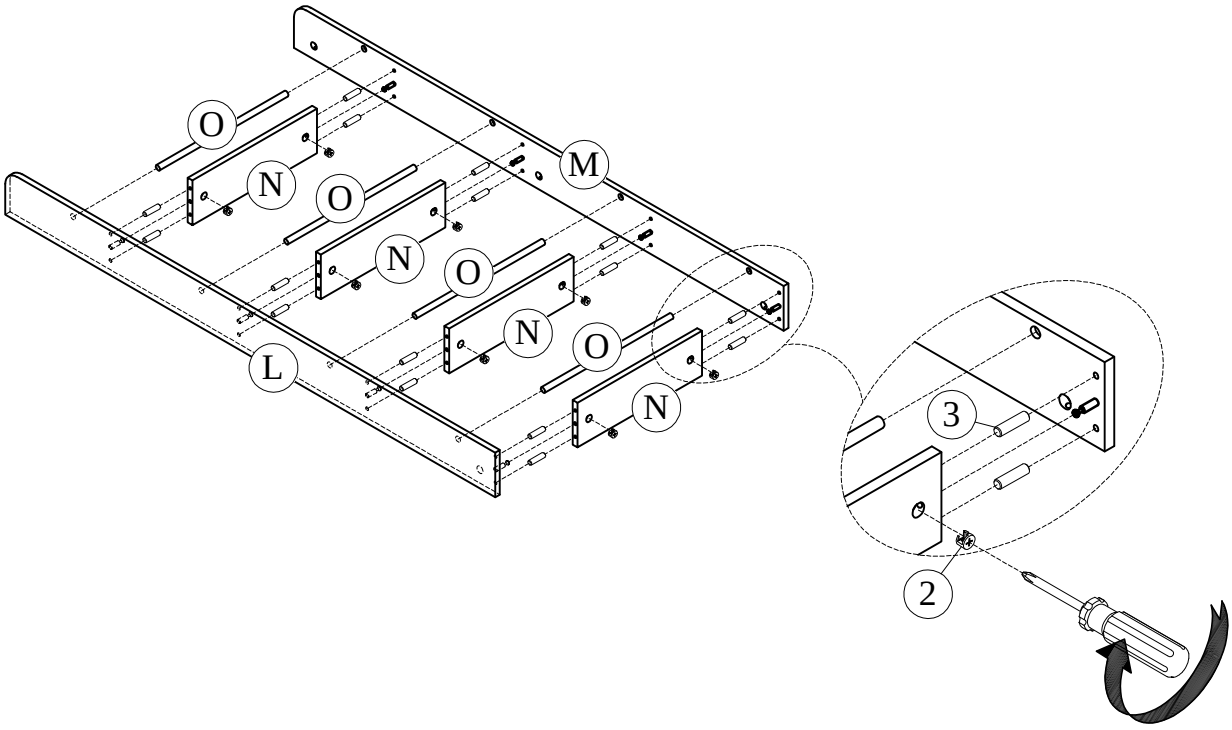

STEP 9:

Following below illustration

-Using hardware #2,#3 connect K with Step 8.

2		6
3		4

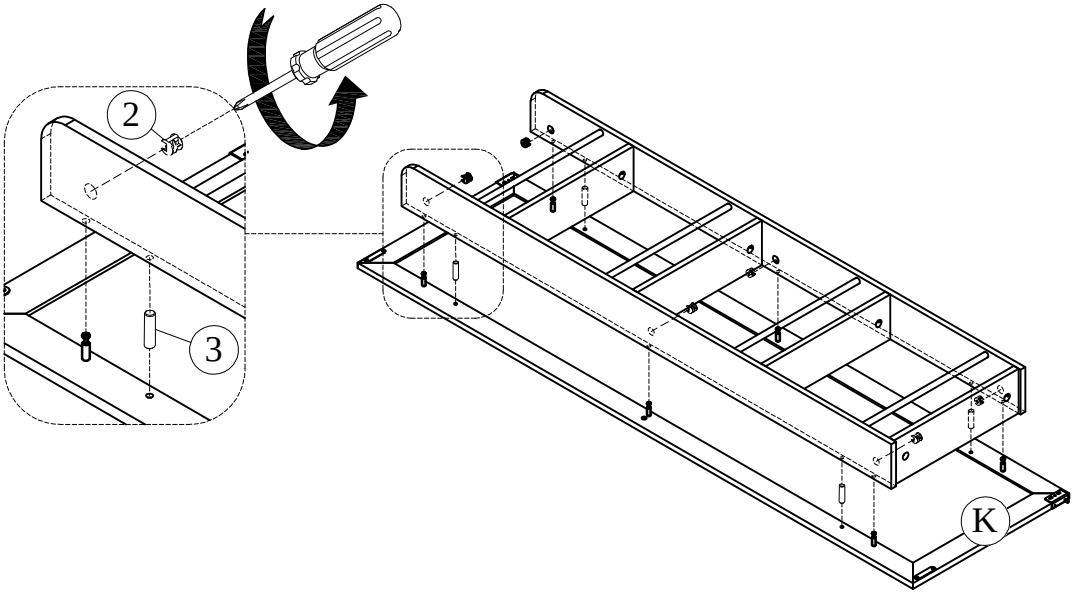

STEP 10:

Following below illustration

-Using hardware #13 connect Step 9 with F.

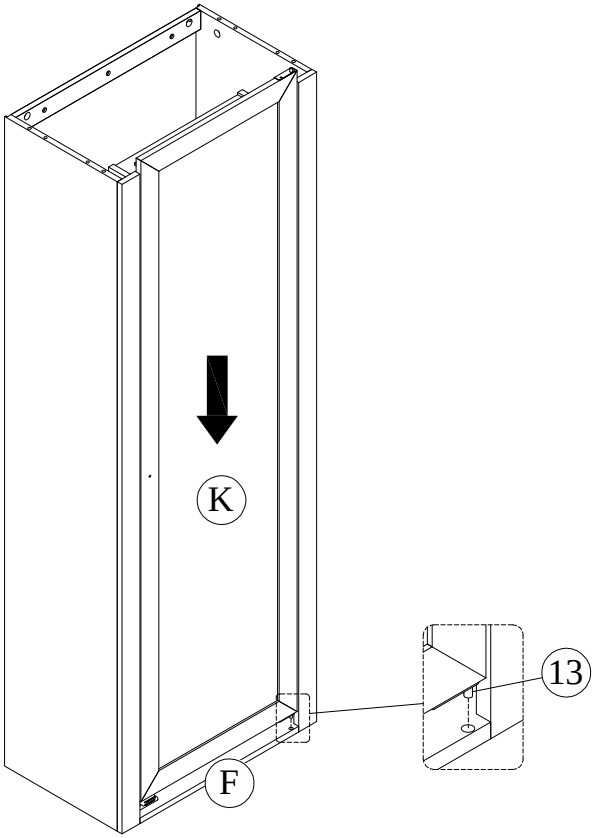

STEP 11: Following below illustration

-Using hardware #7 connect #4 with H.

4	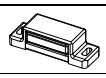	1
7		2

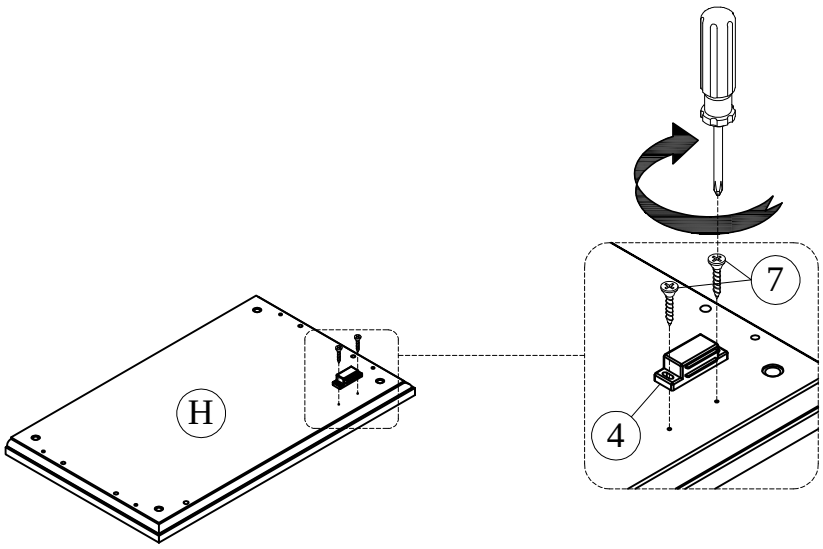

STEP 12: Following below illustration

-Using hardware #1 connect A,H.

1	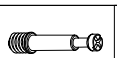	8

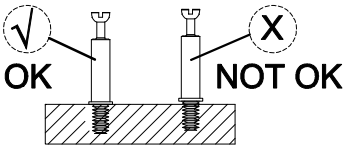

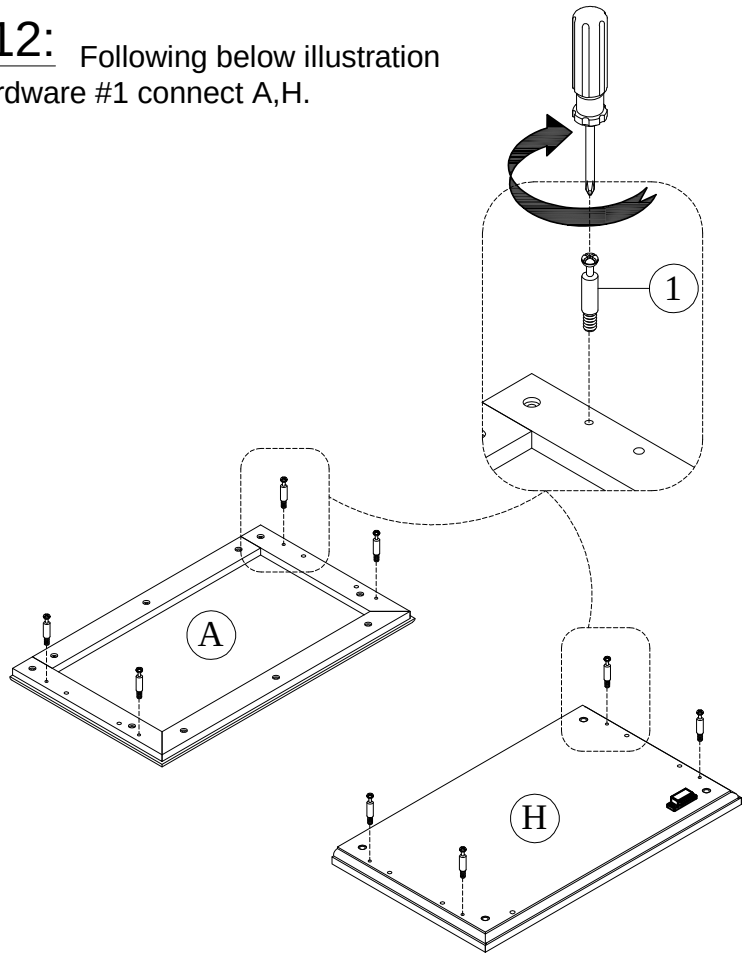

2		4
3		4

STEP 13: Following below illustration

-Using hardware #2,#3 connect H with Step 10.

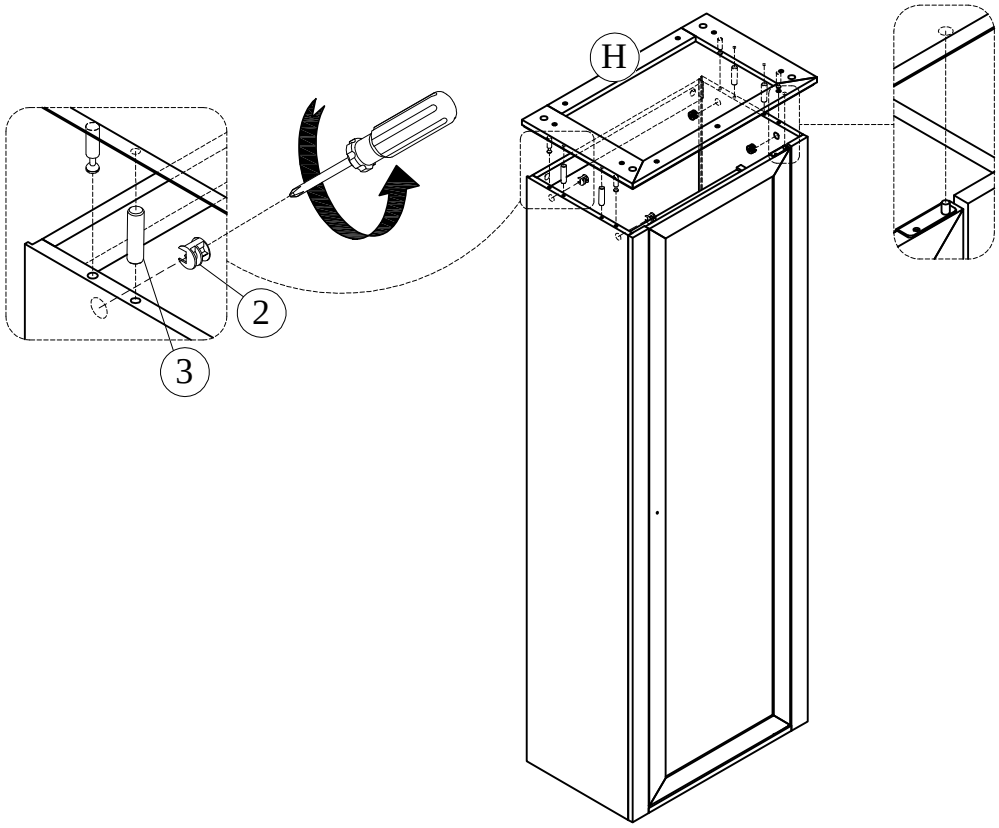

STEP 14:

-Using connect I with Step 13.

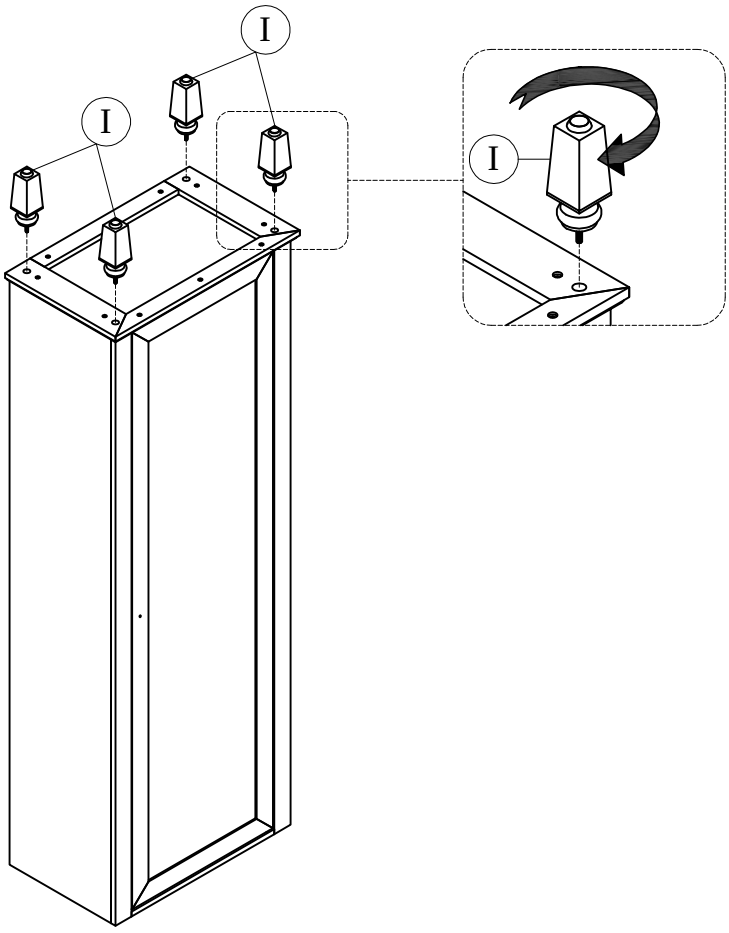

2		4
3		4

STEP 15: Following below illustration

-Using hardware #2,#3 connect A with Step 14.

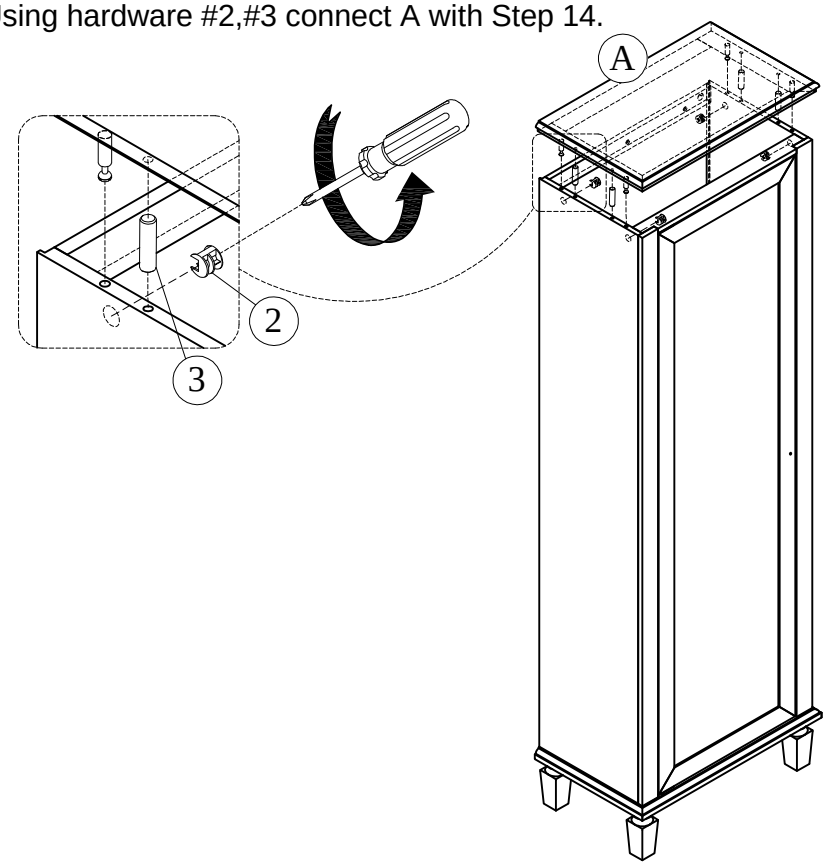

STEP 16: Following below illustration

-Using connect J with R.

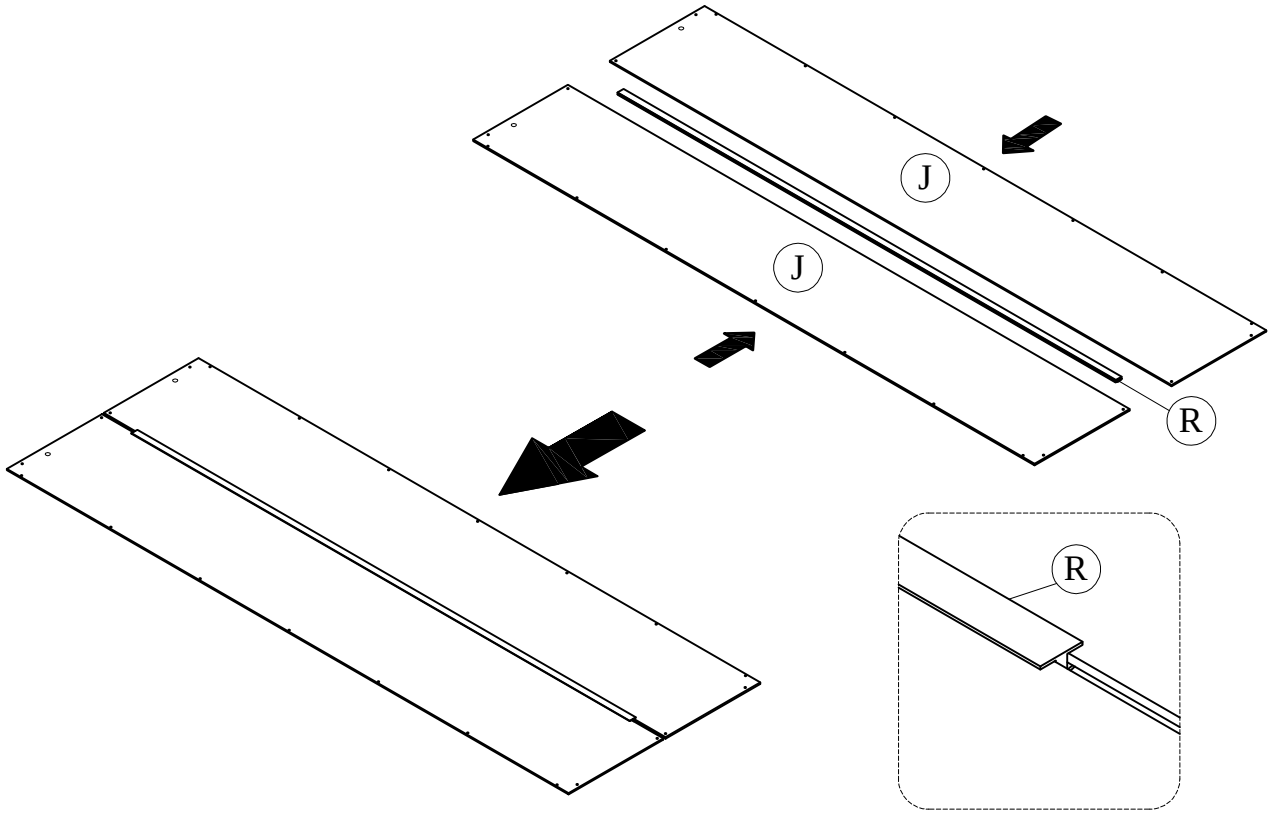

6	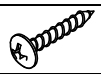	22

STEP 17: Following below illustration

-Using hardware #6 connect Step 16 with Step 15.

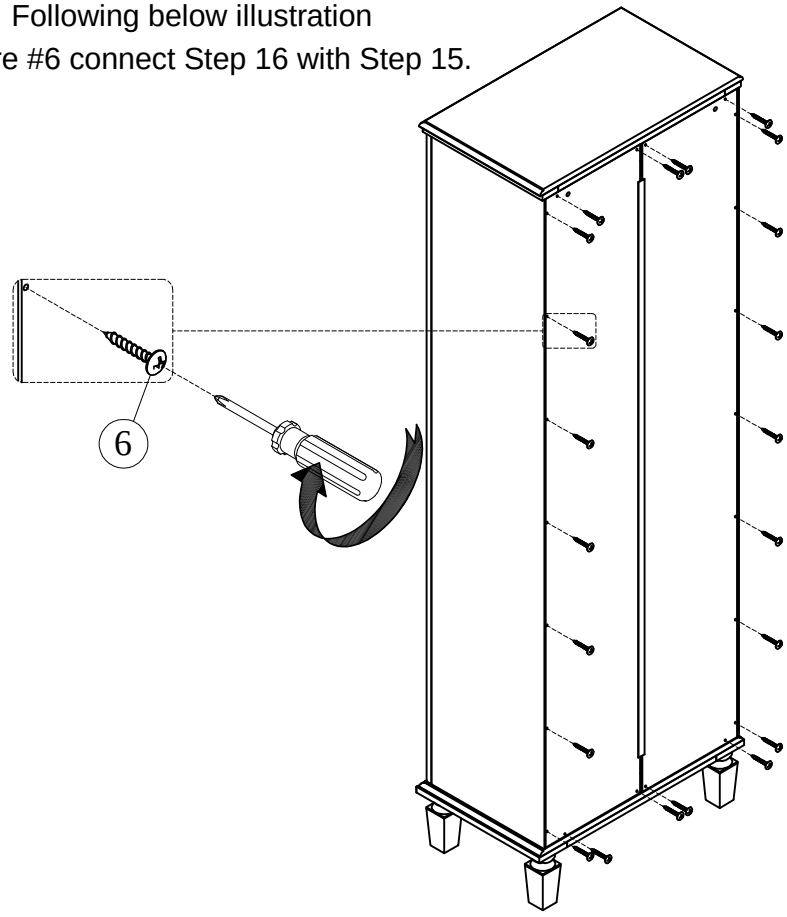

10		8

STEP 18:

-Using hardware #10 connect Step 17.

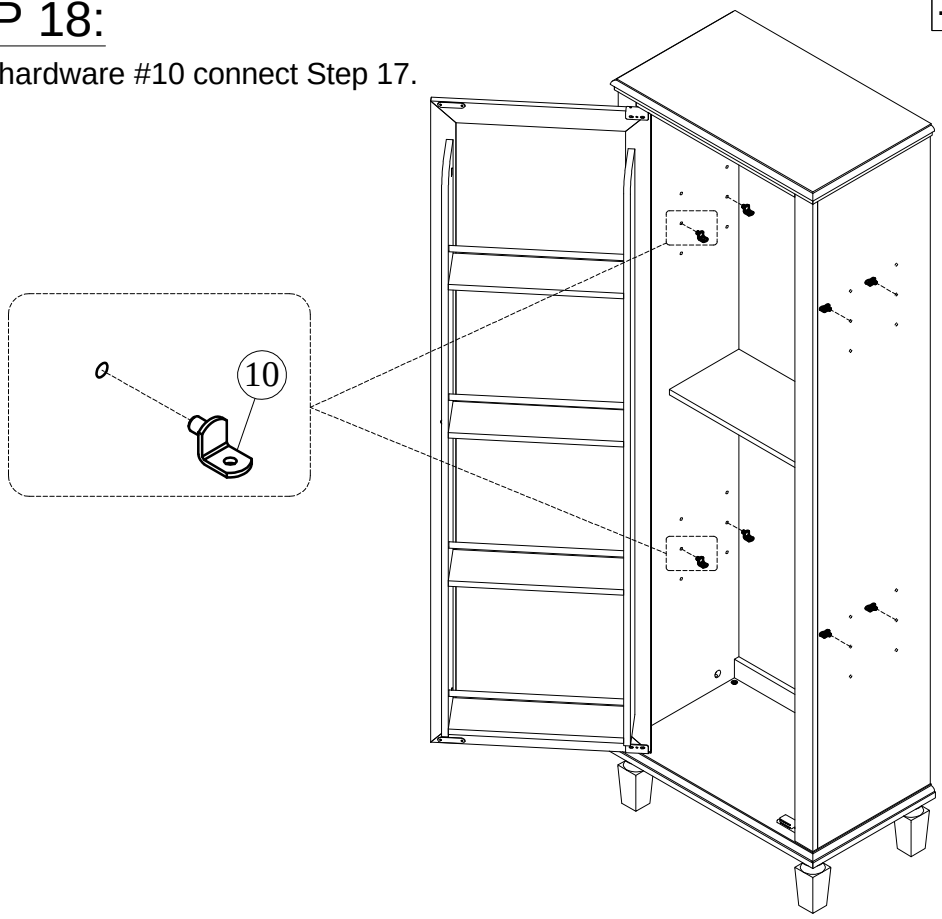

STEP 19: Following below illustration

-Using connect Q with Step 18.

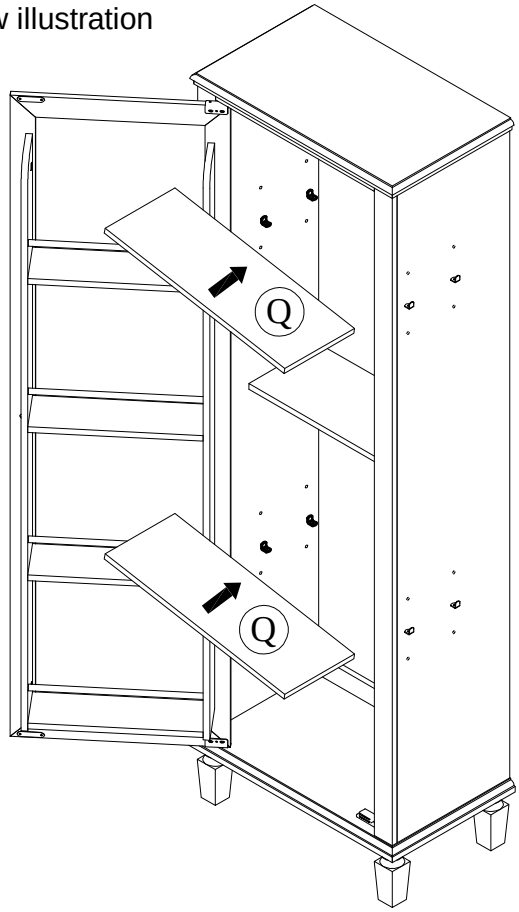

STEP 20:

-Using hardware #11 connect #9 with Step 19.

9		1
11		1

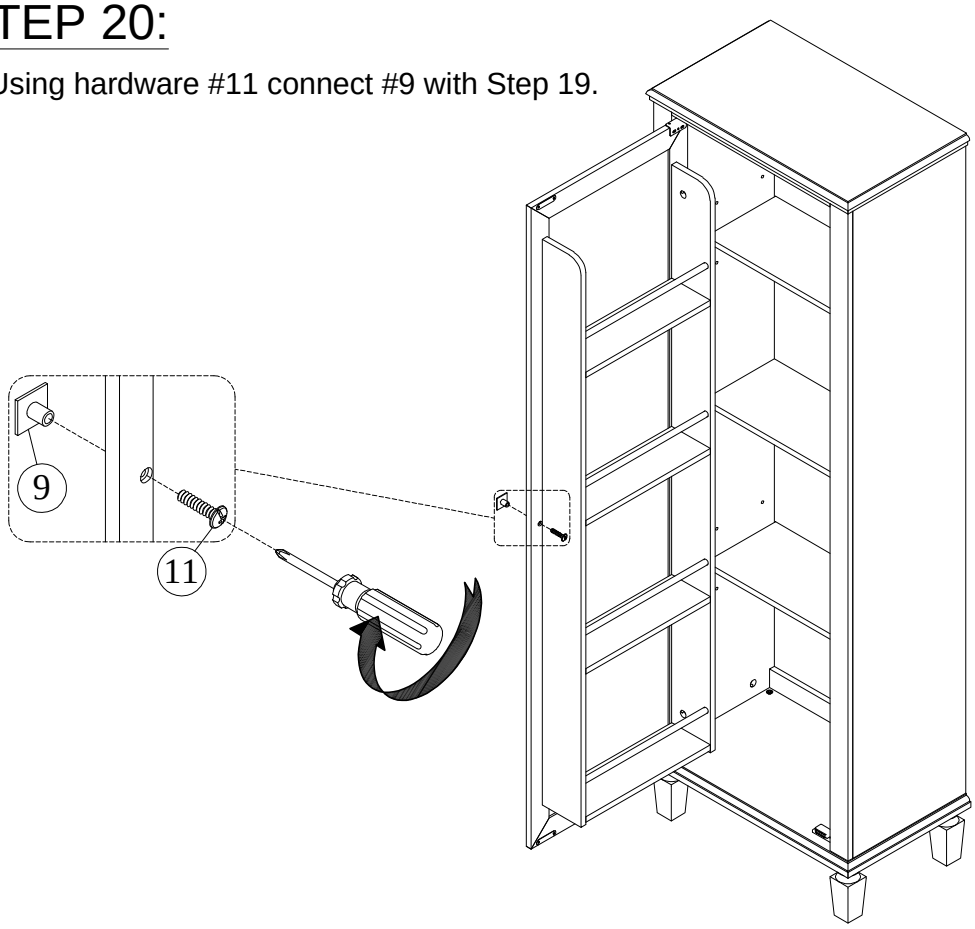

WARNING

Serious or fatal crushing injuries can occur from furniture tip-over.
If the furniture tip over restraint kit is not in the box, please contact our customer service department in order to obtain another kit before using the furniture.

A1		4	D1		2
B1	M4 X 20mm	2			
C1	M4 X 40mm	2	E1		5

16		3

NOTE: The screwdriver is not included in the hardware pack.

